INOVANCE

Advancing industrial technology,
for a better world

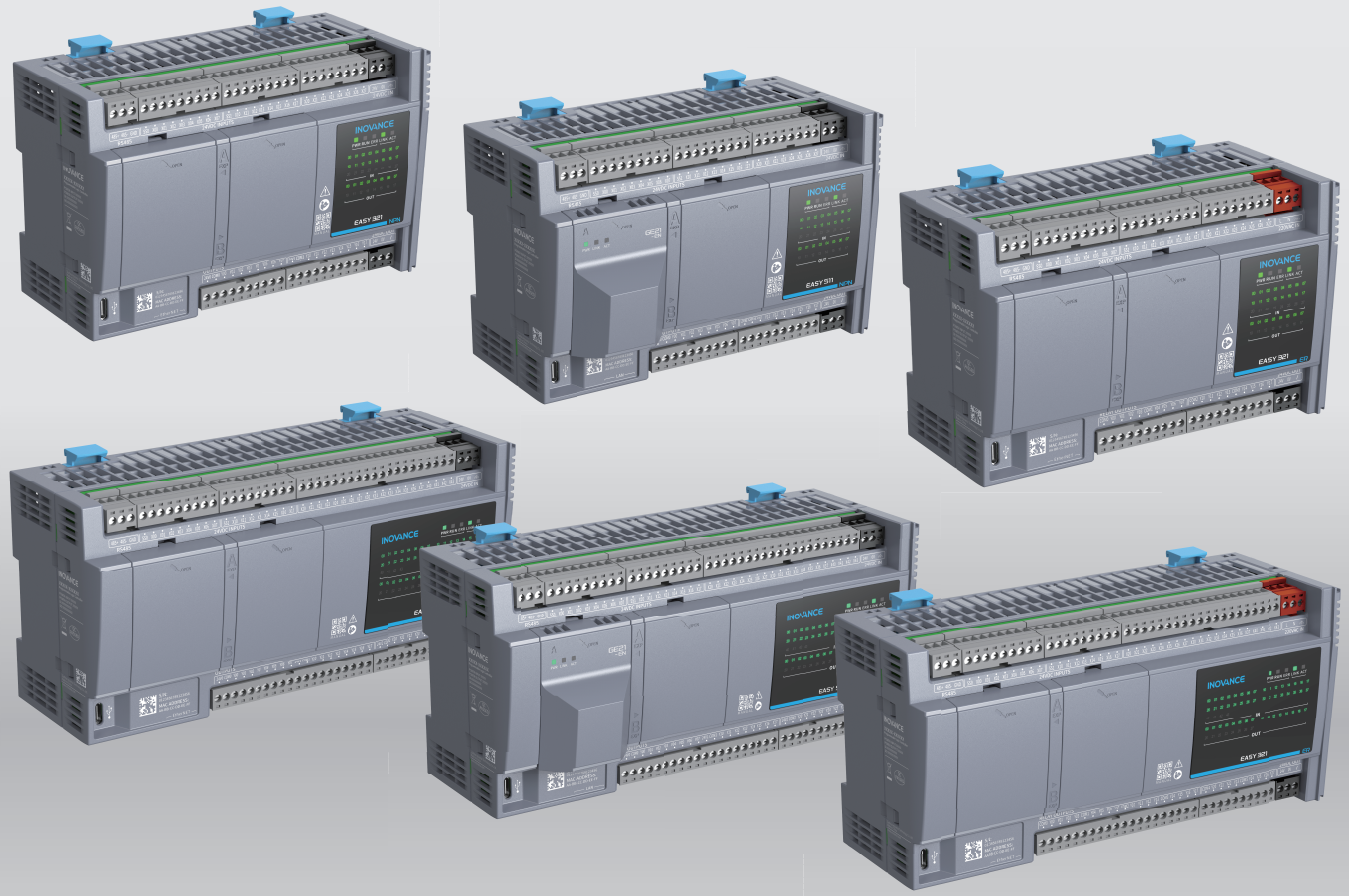

Easy321 & Easy511 Series Programmable Logic Controller

User Guide

Industrial Automation | Intelligent Elevator | New Energy Vehicle | Industrial Robot | Rail Transit

Data code PS00017976A03

Legal Information

Copyright

Copyright © Shenzhen Inovance Technology Co., Ltd. 2025 All rights reserved

This documentation is the exclusive property of Shenzhen Inovance Technology Co., Ltd.. No individual or entity may excerpt, reproduce, modify, translate, or distribute any content herein without written consent from Inovance.

Legal action will be taken against infringement.

Trademarks

INOVANCE is a registered trademark of Shenzhen Inovance Technology Co., Ltd. and its affiliates. All other trademarks or registered trademarks mentioned in this documentation are the property of their respective owners. Unauthorized use of these trademarks by third parties for any purpose without written authorization could violate the rights of their owners.

Disclaimer of Liability

Due to continuous updates and improvements of products and technologies, the content of this documentation may not fully match the actual products. In the event of any discrepancies, the actual products shall prevail.

The contents are subject to change without notice due to product upgrade.

Waste Disposal

The storage, use, and disposal of this product (including optional accessories) must comply with local laws and regulations.

Qualified Personnel

The product/system described in this documentation may be operated only by personnel qualified for the specific task in accordance with the relevant documentation, in particular its warning notices and safety instructions. Qualified personnel can identify the risks of the product/system and prevent possible dangers.

Proper Use of the Product

Proper transportation, storage, assembly, installation, commissioning, operation, and maintenance are required to ensure the safe operation of the product without any problems. The required ambient conditions must be met. All operations must follow the guidelines provided in this documentation.

Preface

Introduction

This user guide presents installation, wiring, configuration and commissioning, functions, fault diagnosis, and maintenance of Easy321 and Easy511 series products.

More data

Name	Code	Description
H5U and Easy Series Programmable Logic Controller Programming Guide	19012249	Presents the basics of PLC programming, quick start instructions, communication, motion control, and instructions for use of high-speed counters.
H5U and Easy Series Programmable Logic Controller Instruction Guide	19012250	Presents the basic and complex instructions used for programming applications, as well as examples of these instructions.
GE21-RTU Coupler Configuration Card User Guide	PS00017987	Presents the product information, installation, wiring, and configuration and commissioning of the GE21-RTU expansion card.
GE21-CAN-485 Communication Expansion Card User Guide	PS00017986	Presents the product information, installation, wiring, and configuration and commissioning of the GE21-CAN-485 expansion card.
GE21-TF-RTC Memory Expansion Card (with Integrated RTC) User Guide	PS00017990	Presents the product information, installation, wiring, and configuration and commissioning of the GE21-TF-RTC expansion card.
GE21-4AD1DA-I Analog Input and Output Current-Type Expansion Card User Guide	PS00021286	Presents the product information, installation, wiring, and configuration commissioning of the GE21-4AD1DA-I expansion card.
GE21-8DI Digital Input Expansion Card User Guide	PS00021287	Presents the product information, installation, wiring, and configuration commissioning of the GE21-8DI expansion card.
GE21-8DO-TN Sink-Type Transistor Output Expansion Card User Guide	PS00021288	Presents the product information, installation, wiring, and configuration commissioning of the GE21-8DO-TN expansion card.
GE21-232 485-RTC Communication Expansion Card User Guide	PS00021289	Presents the product information, installation, wiring, and configuration commissioning of GE21-232/485-RTC expansion cards.
GE21-8DO-TP Source-Type Transistor Output Expansion Card User Guide	PS00021290	Presents the product information, installation, wiring, and configuration commissioning of the GE21-8DO-TP expansion card.
GE21-4AD1DA-V Analog Input and Output Voltage-Type Expansion Card User Guide	PS00021307	Presents the product information, installation, wiring, and configuration commissioning of the GE21-4AD1DA-V expansion card.
Easy321 and Easy511 Series Programmable Logic Controller User Guide (This guide)	PS00017976	Presents installation, wiring, configuration commissioning, functions, fault diagnosis, and maintenance of Easy321 and Easy511 series products.

Standards Compliance

The following table lists the certifications, directives, and standards that the product may comply with. For details about the acquired certificates, see the certification marks on the product nameplate.

Name	Directive		Standard
CE	EMC	2014/30/EU	**24 VDC products:** EN 611312 **220 VAC products:** EN 61131-2 EN 61000-3-2 EN 61000-3-3
	LVD	2014/35/EU	EN 61010-1 EN 61010-2-201
	RoHS directive	2011/65/EU amended by (EU)2015/863	EN IEC 63000
UL/cUL	-		UL 61010-1 UL 61010-2-201 CAN/CSA-C22.2 No. 61010-1 CSA C22.2 NO. 61010-2-201
KCC	-		-
EAC certification	-		-
UKCA	Safety Regulations	Electrical Equipment (Safety) Regulations 2016	EN 61010-1 EN 61010-2-201
	EMC regulation	Electromagnetic Compatibility Regulations 2016	**24 VDC products:** EN 61131-2 **220 VAC products:** EN 61131-2 EN 61000-3-2 EN 61000-3-3
	RoHS regulation	Directive (RoHS) Regulations 2012	EN IEC 63000

Revision History

Date	Version	Revision
August 2025	A03	Made minor corrections.
July 2025	A02	Updated *"2.4.5 Communication Specifications" on page 20*.
June 2025	A01	Made minor corrections.
May 2025	A00	Initial release.

Access to the Guide

This guide is not delivered with the product. You can obtain the PDF version in the following ways

- Do keyword search under Service and Support at *www.inovance.com*.

- Scan the QR code on the product with your smart phone.
- My Inovance APP: Scan the QR code below to install the app, where you can search for and download user guides.

Warranty disclaimer

Inovance provides warranty service within the warranty period (as specified in your order) for any fault or damage that is not caused by improper operation of the user. Maintenance can be charged after the warranty period expires.

Within the warranty period, maintenance can be charged for the following damage:

- Damage caused by operations not following the instructions in the user guide
- Damage caused by fire, flood, or unusual voltage
- Damage caused by unintended use of the product
- Damage caused by use beyond the specified scope of application of the product
- Damage or secondary damage caused by force majeure (natural disaster, earthquake, and lightning strike)

The maintenance is charged according to the latest Price List of Inovance. If otherwise agreed upon, the terms and conditions in the agreement shall prevail.

For details, see Product Warranty Card.

1 Fundamental Safety Instructions

1.1 Fundamental Safety Instructions

Safety Precautions

1. Read and follow the safety instructions when installing, operating, and maintaining the equipment.
2. To ensure your safety and prevent damage to the equipment, follow the marks on the equipment and all the safety instructions in this guide.
3. "CAUTION", "WARNING", and "DANGER" items in this guide do not indicate all safety precautions that need to be followed; instead, they just supplement the safety precautions.
4. Use this equipment according to the designated environment requirements; otherwise, a fault may occur. Malfunction or damage caused by improper use is not covered by warranty.
5. Inovance shall take no responsibility for any personal injury or property damage caused by improper use.

Safety Levels and Definitions

DANGER	"DANGER" indicates that failure to comply with the notice can result in death or severe personal injury.
WARNING	"WARNING" indicates that failure to comply with the notice may result in death or severe personal injury.
CAUTION	"CAUTION" indicates that failure to comply with the notice may result in minor or moderate personal injury or equipment damage. Keep this user guide properly for future use and deliver it to the end user.

Control system design
DANGER • Provide a safety circuit outside the PLC so that the control system can still work safely once external power failure or controller fault occurs. • Add a fuse or circuit breaker because the module may smoke or catch fire due to long-time overcurrent caused by operation above rated current or load short-circuit.
WARNING • An emergency stop circuit, a protection circuit, a forward/reverse operation interlocked circuit, and an upper position limit and lower position limit interlocked circuit must be set in the external circuits of PLC to prevent damage to the equipment. • To ensure safe operation, for the output signals that may cause critical accidents, use external protection circuit and safety mechanism. • Once the CPU of the controller detects an exception in the system, all outputs may be closed. When a fault occurs in the controller circuit, the output may not be under control. Therefore, it is necessary to set up an external control circuit to ensure normal operation. • If the output units such as relays or transistors are damaged, the output may fail to switch between ON and OFF states according to the commands. • The PLC is designed to be used in an indoor electrical environment (overvoltage category II). The power supply must have a system-level surge protector, assuring that overvoltage due to lightning shock cannot be applied to the PLC's power supply input terminals, signal input terminals, and output terminals, to prevent damage to the equipment.
Installation

WARNING

- Installation must be carried out by skilled personal who have undergone specialized electrical training and possess comprehensive electrical expertise.
- Disconnect all external power supplies of the system before disassembling the module. Failure to do so may result in electric shock, module fault, or malfunction.
- Do not use the PLC in environments with dust, greasy smoke, conductive dust, corrosive or combustible gases, exposed to high temperature, condensation, wind & rain, or subject to vibration and shock. Electric shock, fire, and malfunction may also result in damage or deterioration to the product.
- The PLC is open-type equipment that must be installed in a control cabinet with lock (cabinet housing protection > IP20). Only the skilled personnel who have undergone specialized electrical training and possess comprehensive electrical expertise can open the cabinet.

CAUTION

- Prevent metal filings and wire ends from dropping into ventilation holes of the PLC during installation. Failure to comply may result in fire, fault, and malfunction.
- Ensure there are no foreign matters on ventilation surface. Failure to comply may result in poor ventilation, which may cause fire, fault and malfunction.
- Ensure the module is connected to the respective connector securely and hook the module firmly. Improper installation may result in malfunction, fault, or fall-off.

During wiring

DANGER

- Wiring must be carried out by skilled personnel who have undergone specialized electrical training and possess comprehensive electrical expertise.
- Disconnect all external power supplies of the system before wiring. Failure to comply may result in electric shock, module fault, or malfunction.
- Insulate the cable terminals properly to ensure the insulation distance between cables will not be shortened after cables are connected to the terminal block. Failure to comply may result in electric shock or damage to the equipment.

CAUTION

- To avoid electric shock, cut off the power supply before connecting the product to the power supply.
- The input power of the product must meet the specifications listed in this guide. If the power input does not meet the specifications, the equipment may be damaged. Thus, check regularly that the DC power provided by the switching-mode power supply unit is stable.

Operation and Maintenance

CAUTION

- Operation and maintenance must be carried out by skilled personnel who have undergone specialized electrical training and possess comprehensive electrical expertise.
- Do not touch the terminals while the power is on. Failure to comply may result in electric shock or malfunction.
- Disconnect all external power supplies of the system before cleaning the module. Failure to comply may result in electric shock.
- Disconnect all external power supplies of the system before assembling/disassembling the module or connecting/removing the communication cables. Failure to comply may result in electric shock or malfunction.

Safety Recommendations
• In the position where the operator directly touches the machinery part, for example, where a machinery tool is loaded/unloaded, or where a machine runs automatically, the on-site manual operating devices and any other alternative means must be carefully arranged and designed so that they are independent of the PLC and can start or terminate the automatic running of the system. • If modification on the program is needed during system operation, use the lock function or other protective measures. Ensure that only authorized personnel can make the necessary modifications.
Disposal
CAUTION • Dispose of the retired product as industrial waste. Dispose of the battery according to local laws and regulations. • Recycle retired equipment by observing industry waste disposal standards to avoid environmental pollution.

1.2 Industrial Information Safety

The product provides an interface to connect to the network and transmit data through the network interface. To protect factories, systems, machines, and networks from cyber-attacks, a proper industrial information security protection mechanism must be implemented to ensure safe operation of factories, systems, machines, and networks.

The customer is responsible for providing and continuously ensuring a secure connection between the product and the customer network or any other network to prevent unauthorized access to its factories, systems, machines, and networks. The system and device can be connected to the corporate network or Internet only when they are connected securely with appropriate security measures taken (for example, anti-virus software and firewall installation).

Inovance is committed to continuous development and improvement of the products and solutions to improve the level of safety. It is strongly recommended to update the product promptly and always use the latest version.

Caution

Tampering with software (such as viruses, Trojans, and Worms) can lead to unsafe drive state, which can put the device in an unsafe operation state. This may result in death, serious injury, and property damage. Observe the following strictly.

- Always use the latest software version. If the product version is no longer supported or the latest version of the program is not applied, customers are at increased risk of cyber-attacks.
- Take proper protection measures (including but not limited to deploying anti-virus software, firewall, WAF, IPS/IDS, situational awareness system, ID verification, and data encryption) to prevent files in the mobile storage device from being damaged by malware and protect products, networks, systems, and interfaces from unauthorized access, disturbance, intrusion, data disclosure, or information theft.
- Check all safety-related interfaces and settings after commissioning.

Table of Contents

Legal Information 1
Preface 1
1 Fundamental Safety Instructions 4
1.1 Fundamental Safety Instructions 4
1.2 Industrial Information Safety 6
2 Product Introduction 10
2.1 Product Overview 10
2.2 System Networking 11
2.3 Model and Nameplate 12
2.4 Technical Specifications 13
2.4.1 General specifications 13
2.4.2 Power Supply Specifications 16
2.4.3 Input Specifications 17
2.4.4 Output Specifications 19
2.4.5 Communication Specifications 20
2.4.6 Function Specifications 23
2.5 Environmental Specifications 24
2.6 Derating Specifications 25
2.7 Components 27
3 Installation 31
3.1 Installation Instructions 31
3.1.1 Introduction 31
3.1.2 Mounting Method 31
3.1.3 Installation Space 32
3.1.4 Installation Precautions 34
3.2 Installation Preparation 35
3.3 Installation Process 36
3.3.1 Installing the Guide Rail 36
3.3.2 Installing the PLC 36
3.3.3 Installing the Expansion Card 37
3.3.4 Installing the Expansion Module 38
3.3.5 Installing the End Cover 38
3.3.6 Installing the End Plate 39

3.4 Post-installation Inspection 39

4 Wiring 40

4.1 Wiring Instructions 40

4.1.1 Introduction 40

4.1.2 Basic EMC information 40

4.1.3 Cable Routing Requirements 42

4.1.4 Grounding Requirements on Shielded Cables 45

4.1.5 Equipotential Grounding Requirements 46

4.1.6 Surge and Overvoltage Protection 47

4.2 Connecting Ethernet or EtherCAT Network Cable 48

4.2.1 Wiring Precautions 48

4.2.2 Wiring Preparation 48

4.2.3 Pin Assignment 49

4.2.4 Connecting/Disconnecting Cables 50

4.3 Connecting Power Supply Cables and I/O Terminal Cables 50

4.3.1 Wiring Precautions 50

4.3.2 Wiring Preparation 50

4.3.3 Assignment of Power Supply Terminals 51

4.3.4 I/O Terminal Assignment 52

4.3.4.1 Terminal Assignment of 60-point Model 52

4.3.4.2 Assignment of 40-point Model Terminals 56

4.3.5 Terminal Wiring 58

4.3.6 Connecting/Disconnecting Cables 63

4.4 Connecting RS485 Cables 64

4.4.1 Wiring Preparation 64

4.4.2 Terminal Assignment 64

4.4.3 Terminal Wiring 64

4.4.4 Connecting/Disconnecting Cables 64

4.5 Connecting the USB Cable 65

4.5.1 Wiring Preparation 65

4.5.2 Connecting/Disconnecting Cables 65

5 Configuration and Commissioning 66

5.1 Configuration 66

5.2 Commissioning 71

6 Product Functions 76

6.1 PN Coupler Mode 76

6.2 Dual Network Ports 78
6.3 Expansion of Local I/O Points 79
7 Fault Diagnosis 81
7.1 Overview of Fault Diagnosis 81
7.2 Fault Diagnosis Method 81
7.2.1 Introduction 81
7.2.2 Offline Diagnosis with Signal Indicators 81
7.2.3 Online Diagnosis with AutoShop 83
7.3 Fault Diagnosis Cases 84
7.4 Fault Classification and Fault Codes 87
8 Maintenance 89
8.1 Cleaning and Routine Maintenance 89
8.1.1 Cleaning 89
8.1.2 Routine Maintenance 89
8.2 Parts Replacement 91
8.2.1 Replacing the PLC 91
8.2.2 Replacing the Expansion Card 92
8.2.3 Replacing the Expansion Module 92
8.2.4 Replacing the Terminal 93
8.2.5 Replacing the Spare Battery 94
8.3 Software Maintenance 94
8.3.1 Programming the Micro SD Card Firmware 94
8.3.2 Downloading User Program from Micro SD Card 95
8.4 Maintenance 95
9 Appendix 97
9.1 Appendix 1: Dimension Diagram 97
9.2 Appendix 2: Spare Parts 98
9.3 Appendix 3: Applicable Products 99
9.4 Appendix 4: Recycle and Disposal 100
Term 101
Service and Support 102

2 Product Introduction

2.1 Product Overview

Easy321 and Easy511 are small-sized PLCs developed based on the AutoShop programming platform of Inovance. The motion control instructions comply with PLCopen specifications and support multiple programming languages including ST, LD, and SFC. A massive number of I/O points are available on the CPU.

Easy321 series PLCs carry one Ethernet port and are available in two models, 60-point model and 40-point model, both of which are further divided into the relay type, PNP type, and PNP type. Easy511 series PLCs carry one EtherCAT port and are available in two models, 60-point NPN model and 40-point NPN model. The Easy511 series PLC supports Ethernet switchover and carries GE21-EN Ethernet card to support standard Ethernet communication protocol.

The GE21 expansion cards include the GE21-RTU configuration expansion card, GE21-CAN-485 communication expansion card, and GE21-TF-RTC storage expansion card. A wide range of models and expansion cards are available to meet various applications.

Highlights of Easy321

The Easy321 series PLC is mainly applied in logic control and process control. It can be used as smart remote I/O and features the following highlights.

- Dual-core processor, nanoseconds instruction processing speed
- 256 KB user program; 1 MByte custom variables (in which 128 KB are retentive at power failure); about 150 K soft components (soft components numbered above 1000 are retentive at power failure)
- Ethernet x 1; Modbus TCP, OPC UA (server), Socket, and EtherNet/IP, and PN (slave) supported
- Up to eight GL20 local expansion modules supported without the GL20-PS2 power supply module; up to fifteen GL20 local expansion modules supported with the GL20-PS2 power supply module
- Two expansion card slots, with slot A for GE21-CAN-485 expansion card and slot B for GE21-TF-RTC or GE21-RTU expansion card (See *"2.4.1 General specifications" on page 13* for the complete list of expansion card models supported.)
- Multiple programming languages including ST, LD, and SFC supported; built-in ST execution block in the ladder diagram, FB, FC, structures, unions, and arrays supported; virtual simulation supported by the programming software
- Configuration as smart I/O supported through GE21-RTU expansion card without the need for software configuration

Highlights of Easy511

The Easy511 series PLC is mainly applied to bus motion control applications. It features the following highlights.

- Dual-core processor, nanoseconds instruction processing speed
- 256 KB user program; 1 MByte custom variables (in which 128 KB are retentive at power failure); about 150 K soft components (soft components numbered above 1000 are retentive at power failure)

- Ethernet x 1; Modbus TCP, OPC UA (server), Socket, and EtherNet/IP, and PN (slave) supported
- EtherCAT x 1; 8 axes (including pulse axis) in the cycle synchronization mode; 12 axes in the profile mode; up to 72 slaves supported; switchover to Ethernet supported
- Up to eight GL20 local expansion modules supported without the GL20-PS2 power supply module; up to fifteen GL20 local expansion modules supported with the GL20-PS2 power supply module
- Two expansion card slots, with slot A for GE21-EN expansion card and slot B for GE21-TF-RTC or GE21-4AD1DA-I expansion card (See *"2.4.1 General specifications" on page 13* for the complete list of expansion card models supported.)
- Multiple programming languages including ST, LD, and SFC supported; built-in ST execution block in the ladder diagram, FB, FC, structures, unions, and arrays supported; virtual simulation supported by the programming software

For details about Easy321 and Easy511, see *"2.3 Model and Nameplate" on page 12*.

2.2 System Networking

The Easy321 and Easy511 series PLCs support Modbus TCP, EtherNet/IP, OPC UA (Server), PN (Slave), and Socket communication protocols. You can connect the PLC to other stations, ERP, MES, and other systems through a switch. The Easy511 series PLC is equipped with the EtherCAT communication function by default to control operations of the servo drives, AC drives and remote I/Os. The Easy321 series PLC can support CAN communication through a expansion card to connect to the servo drive and AC drive.

The following figure shows a typical system networking diagram.

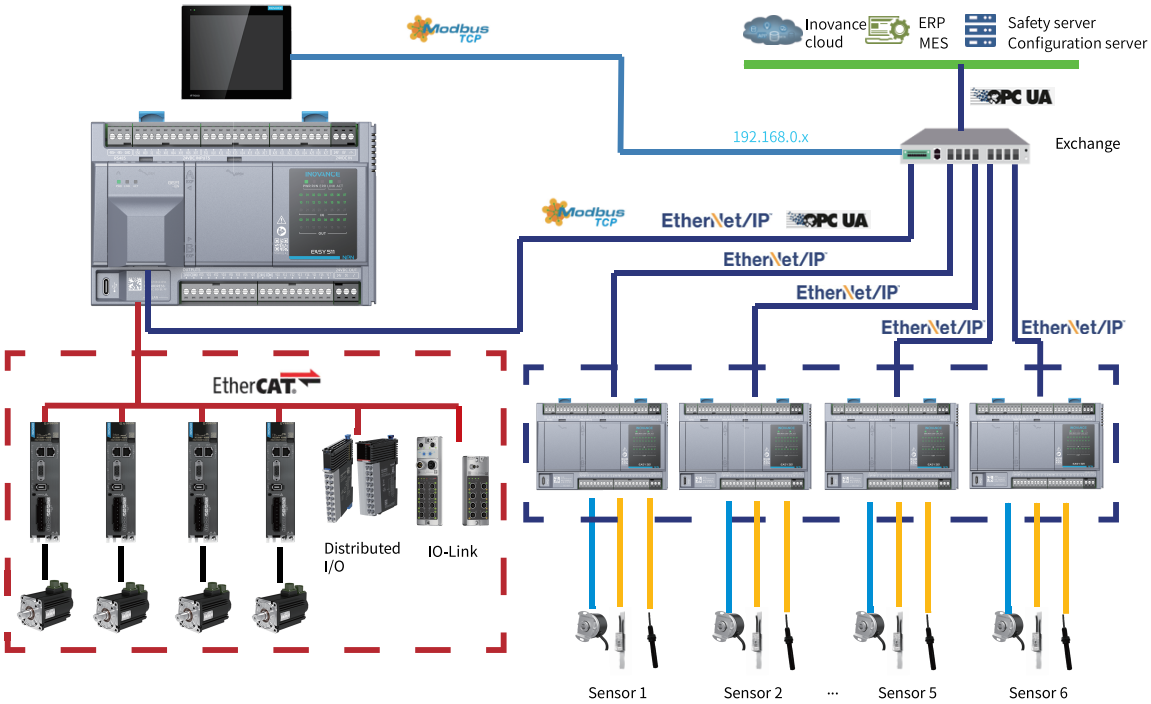

The Easy321 series PLC can be configured as a PN remote I/O through the GE21-RTU coupler configuration card to back up the configuration information of the PLC that used as I/O.

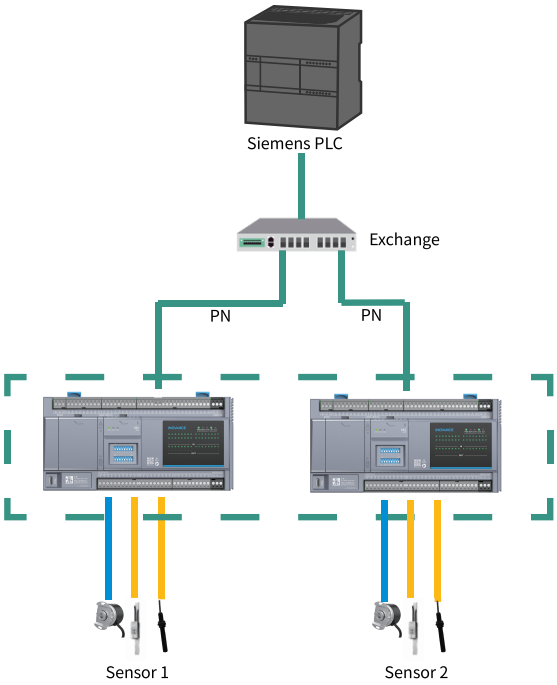

2.3 Model and Nameplate

Model description

Take the Easy321-3624ER model as an example. The model description is shown as follows.

Easy 321 - 36 24 ER

① ② ③ ④ ⑤

① **Product series** Easy: Easy series programmable logic controller	④ **Number of outputs** 24: 24 outputs 16: 16 outputs
② **Product model** 321: Easy300 series product model 511: Easy500 series product model	⑤ **Output type** ER: Relay TN: Sink-type transistor TP: Source-type transistor
③ **Number of inputs** 36: 36 inputs 24: 24 inputs	-

Nameplate description

Take the Easy321-3624ER model as an example. The nameplate description is shown in the following figure. For information about the nameplates of other models, see *"2.4.2 Power Supply Specifications" on page 16*, *"2.4.3 Input Specifications" on page 17*, and *"2.4.4 Output Specifications" on page 19*.

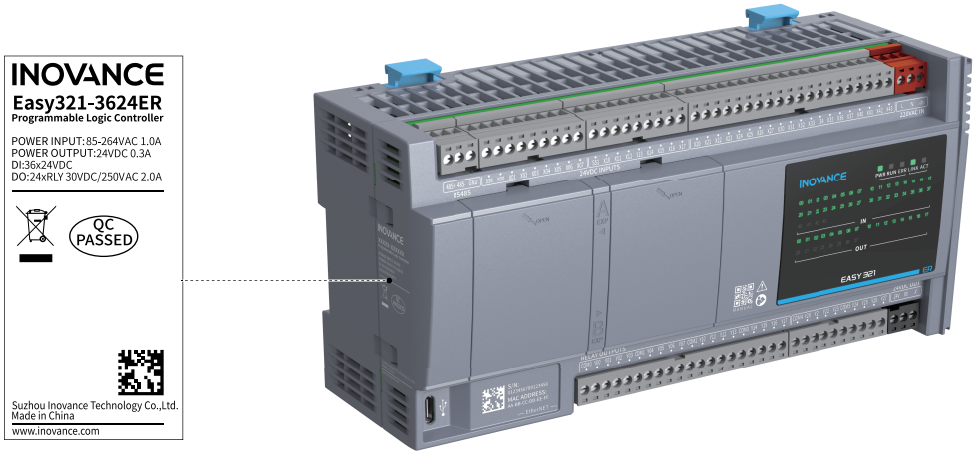

Model	Description	Material code
Easy321-3624ER	Easy300 series programmable controller with 36 inputs and 24 relay outputs	01440709
Easy321-3624TP	Easy300 series programmable controller with 36 inputs and 24 transistor source outputs	01440710
Easy321-3624TN	Easy300 programmable controller with 36 inputs and 24 transistor sink outputs	01440711
Easy321-2416ER	Easy300 series programmable controller with 24 inputs and 16 relay outputs	01440715
Easy321-2416TP	Easy300 series programmable controller with 24 inputs and 16 transistor source outputs	01440716
Easy321-2416TN	Easy300 programmable controller with 24 inputs and 16 transistor sink outputs	01440717
Easy511-3624TN	Easy500 series programmable controller with 36 inputs and 24 transistor sink outputs (slot A for EN card)	01440944
Easy511-2416TN	Easy500 series programmable controller with 24 inputs and 16 transistor sink outputs (slot A for EN card)	01440945

2.4 Technical Specifications

2.4.1 General specifications

Item	Specification					
	Easy321-3624ER	Easy321-2416ER	Easy321-3624TN/TP	Easy321-2416TN/TP	Easy511-3624TN	Easy511-2416TN
Dimensions (W x H x D)	205 mm x 100 mm x 75 mm	155 mm x 100 mm x 75 mm	205 mm x 100 mm x 75 mm	155 mm x 100 mm x 75 mm	205 mm x 100 mm x 85 mm	155 mm x 100 mm x 85 mm
Weight	About 750 g	About 630 g	About 615 g	About 525 g	About 635 g	About 545 g
Program data capacity	• 256 KB user program • 1 Mbyte custom variables, in which 128 KB are retentive at power failure • About 150 K soft components, in which those numbered above 1000 are retentive at power failure					

<table>
<tr><th colspan="2" rowspan="2">Item</th><th colspan="6">Specification</th></tr>
<tr><th>Easy321-3624ER</th><th>Easy321-2416ER</th><th>Easy321-3624TN/TP</th><th>Easy321-2416TN/TP</th><th>Easy511-3624TN</th><th>Easy511-2416TN</th></tr>
<tr><td rowspan="4">Instruction processing speed</td><td>Instruction speed</td><td colspan="6">20 K steps with 2 ms scan cycle</td></tr>
<tr><td>Bit operation</td><td colspan="6">0.144 μs/instruction</td></tr>
<tr><td>Word transmission</td><td colspan="6">0.338 μs/instruction</td></tr>
<tr><td>Floating-point operation</td><td colspan="6">0.779 μs/instruction</td></tr>
<tr><td rowspan="2">High-speed I/O</td><td>High-speed input</td><td colspan="6">Pulse input supported, max. 4 axes (encoder axis)/8-channel 200 K, AB phase supported, pulse+direction, CW/CCW, unidirectional counting</td></tr>
<tr><td>High-speed output</td><td colspan="2">Not supported</td><td colspan="4">Pulse input supported, max. 4 axes (pulse axis, unified instruction with bus axis)/8-channel 200 K, AB phase supported, pulse+direction, CW/CCW, PWM pulse width modulation (4-channel) supported</td></tr>
<tr><td rowspan="4">Expansion module and expansion card</td><td>Local expansion module</td><td colspan="6">• Up to eight GL20 local expansion modules supported without GL20-PS2 power supply
• Fifteen GL20 local expansion modules supported with GL20-PS2 power supply (The number of expansion modules must be calculated based on the bus current consumption [1].)</td></tr>
<tr><td rowspan="2">Expansion card</td><td colspan="6">• GE21-RTU expansion card that allows the PLC to be quickly configured as a PN coupler
• GE21-RTU expansion card that backs up the configuration information of the PLC when it is used as smart I/O; original parameters downloaded automatically after PLC replacement</td></tr>
<tr><td colspan="4">Two expansion card slots available
• Slot A for the following expansion card models: GE21-CAN-485, GE21-4AD1DA-I, GE21-4AD1DA-V, GE21-EN, GE21-WIFI, GE21-8DI, GE21-8DO-TN, GE21-8DO-TP
• Slot B for the following expansion card models: GE21-4AD1DA-I, GE21-4AD1DA-V, GE21-232/485-RTC, GE21-TF-RTC, GE21-RTU, GE21-8DI, GE21-8DO-TN, GE21-8DO-TP</td><td colspan="2">Two expansion card slots available
• Slot A for GE21-EN Ethernet card as standard, with 100 Mbps Ethernet supported
• Slot B for the following expansion card models: E21-4AD1DA-I, GE21-4AD1DA-V, GE21-232/485-RTC, GE21-TF-RTC, GE21-RTU, GE21-8DI, GE21-8DO-TN, GE21-8DO-TP</td></tr>
<tr><td>PLC program/ firmware update</td><td colspan="6">Updated through GE21-TF-RTC expansion card</td></tr>
</table>

Note

[1]:

- The following requirements must be met when connecting the expansion module. Otherwise, the GL20-PS2 module power supply must be added to the right side of the corresponding module before the limit is exceeded.
  - The total power consumption of the expansion module does not exceed the PLC bus power supply current of 1 A.
  - The number of expansion modules does not exceed eight.
- Calculation example: Expansion of eight GL20-0808ETN (power consumption: 130 mA) + seven GL20-8ADI (power consumption: 65 mA) expansion modules. For detailed power consumption of each module, see *"9.3 Appendix 3: Applicable Products" on page 99*.
  - Total power consumption of the expansion I/O modules = 130 mA x 8 + 65 mA x 7 = 1495 mA (Total power consumption of the expansion modules = Power consumption of expansion module 1 + Power consumption of expansion module 2 +... + Power consumption of expansion module n.)
  - Check whether the power consumption and number of expansion modules exceed the limit.
    - The current bus power consumption is 1495 mA, which exceeds the PLC power supply capacity of 1A.
    - The current number of expansion modules is 15, which exceeds the maximum permissible number of 8.
  - Check the configuration form.

    In conclusion, the PLC cannot support the above configuration. The GL20-PS2 module must be added to the right side of the 7th module. The total power consumption of the module with the PLC is 965 mA (130 mA x 7 + 55 mA x 1 = 965 mA). The power consumption of GL20-PS2 is 55 mA. The total number of expansion modules is 16. The system configuration is shown in the following figure.

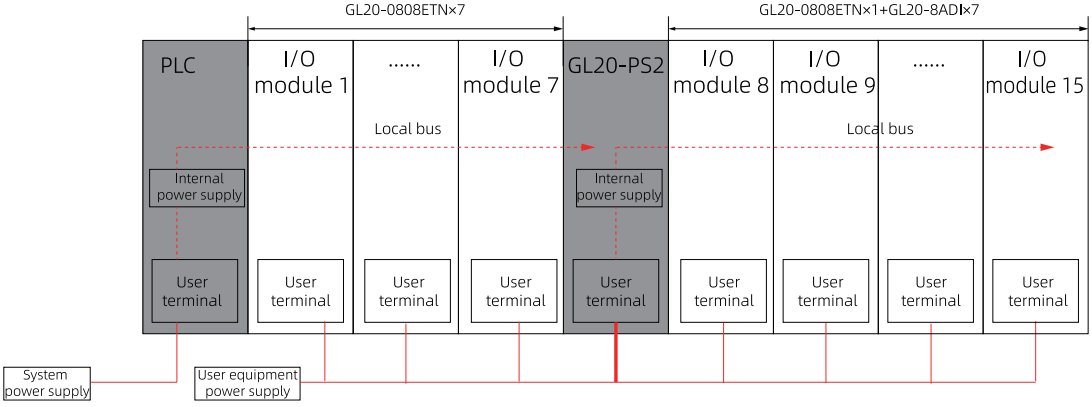

2.4.2 Power Supply Specifications

Item			Specification					
			Easy321-3624ER	Easy321-2416ER	Easy321-3624TN/TP	Easy321-2416TN/TP	Easy511-3624TN	Easy511-2416TN
Power supply input	Rated voltage		220 VAC input, voltage range: 85 VAC to 264 VAC For voltages between 85 VAC to 100 VAC/240 VAC to 264 VAC, derate the load by 50%, as shown below.		24 VDC input, voltage range: 21.6 VDC to 26.4 VDC			
	Rated current		1 A		1 A (max.@24 V)			
	Power supply protection	Short circuit supported	Supported					
		Reversed polarity protection	Supported					
Power supply output	Rated voltage		20.4 VDC to 26.4 VDC					
	Maximum current		0.3 A					
Local bus	Rated current		1 A, up to 8 local expansion modules supported					
	Hot swap		Not supported					

For safety reasons, derate the PLC under undervoltage and high voltage environments based on the following derating curves.

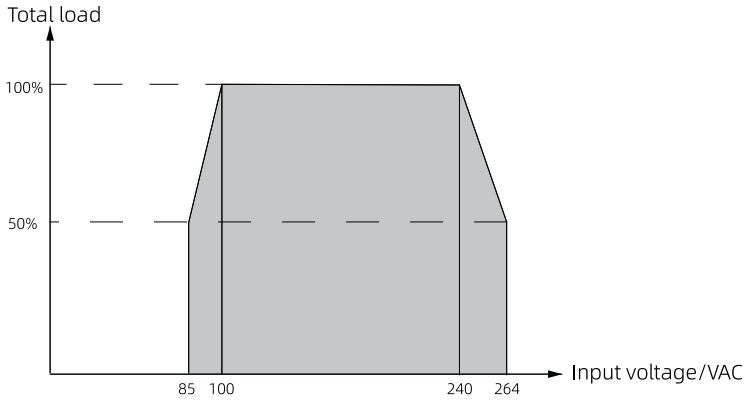

2.4.3 Input Specifications

Digital input

Item			Specification					
			Easy321-3624ER	Easy321-2416ER	Easy321-3624TN/TP	Easy321-2416TN/TP	Easy511-3624TN	Easy511-2416TN
High-speed DI terminal	Input type		Digital input					
	Input mode		Source/Sink					
	Number of input channels		8-channel (high-speed)					
	Input voltage class		24 VDC±10% (21.6 VDC to 26.4 VDC)					
	High-speed input (X0-X7)	Input current at input ON	Input current > 4 mA					
		Input current at input OFF	Input current < 2.5 mA					
		Hardware response time	2 μs (RC time)					
		Maximum input frequency	200 kHz					
		Input resistance	3.3 kΩ					
	ON voltage		>15 VDC					
	OFF voltage		< 5 VDC					
	Software filter time		High speed: 200 ns to 1000 μs					
	Common terminal mode		The common terminal is shared by all the DIs (polarity (+/-) of the input power supply can be changed).					
	Input derating		For details, see "2.6 Derating Specifications" on page 25.					

Item			Specification					
			Easy321-3624ER	Easy321-2416ER	Easy321-3624TN/TP	Easy321-2416TN/TP	Easy511-3624TN	Easy511-2416TN
Regular DI terminal	Input type		Digital input					
	Input mode		Source/Sink					
	Number of input channels		28 channels (regular)	16 channels (regular)	28 channels (regular)	16 channels (regular)	28 channels (regular)	16 channels (regular)
	Input voltage class		24 VDC±10% (21.6 VDC to 26.4 VDC)					
	Standard input	Input current at input ON	4 mA (typical@24 V)					
		Hardware response time upon ON/OFF	100 μs/100 μs					
		Maximum input frequency	250 Hz					
		Input resistance	5.6 kΩ					
	ON voltage		>15 VDC					
	OFF voltage		< 5 VDC					
	Software filter time		Low speed: 2 ms to 1000 ms					
	Common terminal mode		The common terminal is shared by all the DIs (polarity (+/-) of the input power supply can be changed).					
	Input derating		For details, see *"2.6 Derating Specifications" on page 25*.					

2.4.4 Output Specifications

Digital output

Item			Specification			
			Easy321-3624TN/TP	Easy321-2416TN/TP	Easy511-3624TN	Easy511-2416TN
High-speed output terminal	Output type		Digital output (transistor)			
	Output mode		Sink (NPN)/Source (PNP)		Sink (NPN)	
	Number of output channels		8-channel (high-speed)			
	Output voltage class		24 VDC±10% (21.6 VDC to 26.4 VDC)			
	Output load	Resistive load	0.5 A/point; 2 A/8 points			
		Inductive load	7.2 W/point; 24 W/8 points			
		Lamp load	5 W/point; 18 W/8 points			
	Hardware response time upon ON/OFF		< 1 μs (OFF→ON); < 2 μs (ON→OFF)			
	Load current requirements		Load current ≥ 12 mA when used with outputs greater than 10 kHz			
	Maximum output frequency		Resistive load: 200 kHz; inductive load: 0.5 Hz; lamp load: 10 Hz			
	PWM output		Maximum frequency: 200 kHz; minimum pulse width: 2.5 μs; minimum resolution: 2.5 μs, adjustable duty cycle: 0.01% to 99.99% (The duty cycle is related to the frequency. The pulse width corresponding to the duty cycle cannot be lower than the minimum pulse width.)			
Regular output terminal	Output type		Digital output (transistor)			
	Output mode		Sink (NPN)/Source (PNP)		Sink (NPN)	
	Number of output channels		16 channels (regular)	8 channels (regular)	16 channels (regular)	8 channels (regular)
	Output voltage class		24 VDC±10% (21.6 VDC to 26.4 VDC)			
	Output load	Resistive load	0.5 A/point; 2 A/8 points			
		Inductive load	7.2 W/point; 24 W/8 points			
		Lamp load	5 W/point; 18 W/8 points			
	Hardware response time upon ON/OFF		100 μs/100 μs			
	Switching frequency		Resistive load: 100 Hz; inductive load: 0.5 Hz; lamp load: 10 Hz			
Leakage current upon OFF			< 10 μA at rated 24 V			
Maximum residual voltage upon ON			< 0.5 VDC			
Common terminal mode			8 points/common terminal			
Short circuit protection			Available per channel			
External inductive load protection			A flywheel diode is required when an external inductive load is connected.			
Output derating			For details, see *"2.6 Derating Specifications" on page 25*.			

Specifications of relay-type output

Item			Specification	
			Easy321-3624ER	Easy321-2416ER
DO terminals	Output type		Relay output	
	Output mode		Dry contact	
	Number of output channels		24 channels (regular)	16 channels (regular)
	Output voltage class		250 VAC/30 VDC	
	Output load	Resistive load	2 A/point; 8 A/4 points	
		Inductive load	220 VAC, 80 VA	
		Lamp load	220 VAC, 100 W; 24 VDC, 30 W	
	Hardware response time upon ON/OFF		Approx. 15 ms	
	Minimum load		5 VDC, 100 mA	
	Switching frequency		No more than 20 operations per minute	
	Mechanical life		5000000 operations	
	Electrical service life		100000 operations (≤ 2 A)	
	Output derating		For details, see *"2.6 Derating Specifications" on page 25*.	

2.4.5 Communication Specifications

Ethernet specifications

Item	Specification					
	Easy321-3624ER	Easy321-2416ER	Easy321-3624TN/TP	Easy321-2416TN/TP	Easy511-3624TN	Easy511-2416TN
Number of channels supported	One Ethernet channel				One Ethernet channel and one EtherCAT channel	
Network media	Flexible crossover cable, double-shielded (SFTP or SFTPP), Cat5e or above (For details, see *"4.2.2 Wiring Preparation" on page 48*.)					
Duplex mode	Full duplex					
Hardware terminal	Single network port RJ45					
Baud rate	10 Mbps/100 Mbps					
Communication distance	≤ 100 m					
Protocol	• EtherNet/IP protocol and master-slave (up to 32 slaves) mode supported • Maximum data volume for an individual communication: 1400 bytes					
	Modbus TCP protocol supported, serving as a master or slave, up to 31 slaves supported					
	FINS slave supported					
	Socket					
	OPC UA protocol supported, serving as a server only					
	Serving as a PN slave only, up to 16 modules supported					

EtherCAT specifications

Item	Specification	
	Easy511-3624TN	Easy511-2416TN
Number of network port	1	
Communication protocol	EtherCAT protocol	
Services available	FoE, CoE (PDO, SDO)	
Synchronization mode	• DC synchronization • SM synchronization • Custom DC mode For details about terms, see " Term" on page 101.	
Physical layer	100Base-TX	
Baud rate	100 Mbps	
Duplex mode	Full duplex	
Topology	• Bus topology • Star topology	
Transmission medium	Flexible crossover cable, double-shielded (SFTP or SFTPP), Cat5e or above (For details, see "4.2.2 Wiring Preparation" on page 48.)	
Transmission distance	Less than 100 m between two nodes	
EtherCAT frame length	44 bytes to 1498 bytes	
Process data	Up to 1486 bytes per Ethernet frame	
Automatic scanning	Supported	
Number of axes	Up to 12 axes, in which 8 axes for cyclic synchronization mode (including pulse axis) and 4 axes for profile mode	
Number of slaves	Up to 72 slaves supported	
Cam	Synchronous operation of 8 groups of cams supported	
End-to-End network integration	End-to-end network integration supported	
Disable and scan	Disabling and scanning of slaves supported	

RS485 specifications

Item	Specification					
	Easy321-3624ER	Easy321-2416ER	Easy321-3624TN/TP	Easy321-2416TN/TP	Easy511-3624TN	Easy511-2416TN
Number of channels supported	RS485 x 11 (1 built-in channel + 2 channels provided by expansion card + 8 channels provided by local expansion module)				RS485 x 11 (1 built-in channel + 2 channels provided by expansion card + 8 channels provided by local expansion module)	
Hardware terminal	3-pin terminal on the user side					
Isolation	Not supported					

Item	Specification					
	Easy321-3624ER	Easy321-2416ER	Easy321-3624TN/TP	Easy321-2416TN/TP	Easy511-3624TN	Easy511-2416TN
Termination resistor	None (external termination resistor needed), serving as a master or slave					
Number of slaves	Up to 31 slaves supported (Each branch line distance must be shorter than 3 m as shown in *"4.4.3 Terminal Wiring" on page 64*.)					
Communication baud rate	9600 bps, 19200 bps, 38400 bps, 57600 bps, and 115200 bps supported					
Short circuit protection	Providing protection against incorrect 24 V connection					
Protocol	Serial free protocol, Modbus ASCII protocol (master-slave), and Modbus-RTU protocol (master-slave) supported					

CAN specifications

The GE21-CAN-485 expansion card supports the CAN protocol. For details, see *GE21-CAN-485 Communication Expansion Card User Guide.*

Item	Specification					
	Easy321-3624ER	Easy321-2416ER	Easy321-3624TN/TP	Easy321-2416TN/TP	Easy511-3624TN	Easy511-2416TN
Number of channels supported	One channel can be provided by the expansion card.				-	
Protocol	CANlink and CANopen protocols supported					
Slave	• CANlink: Up to 63 slaves supported • CANopen: Up to 30 slaves supported					

USB specifications

Item	Specification					
	Easy321-3624ER	Easy321-2416ER	Easy321-3624TN/TP	Easy321-2416TN/TP	Easy511-3624TN	Easy511-2416TN
Number of channels supported	1					
USB cable distance	1.5 m					
USB communication version	USB 2.0 at full speed					
USB hardware interface	Type-C interface					
Function	Monitoring, online editing, program upload/download, and firmware update					

Network port specifications

Note

- The Easy511 series PLC is equipped with a GE21-EN Ethernet card as standard and supports dual network ports.
- The Easy321 series PLC supports a single network port.

Item	Built-in network port (Ethernet 0)	Expansion network port (Ethernet 1)	Description
Default IP	• Easy511: 192.168.2.88 • Easy321: 192.168.1.88	Easy511: 192.168.1.88	-
IP conflict detection	Supported	Supported	-
Cross-segment IP adjustment	Supported	Supported	-
System variable-based adjustment	Supported	Supported	-
Modbus TCP	Supported	Supported	-
OPC UA	Supported	Supported	Use either built-in or expansion network port, but not both.
EtherNet/IP	Supported	Supported	Use either built-in or expansion network port, but not both.
FINS	Supported	Supported	-
PN	Supported	Supported	Use either built-in or expansion network port, but not both.
EtherCAT switchover	• Easy511: EtherCAT for built-in network port by default, which can be switched to Ethernet • Easy321: EtherCAT not supported	Not supported	-
TCP/UDP instruction	Supported	Supported	-
Monitoring protocol	Supported	Supported	-
MC protocol	Supported	Supported	For details on MC protocol configuration and applicable specifications, see section MC Communication in H5U&Easy Series Programmable Logic Controller Programming Guide.
Program upload/ download	Supported	Supported	-
Firmware update	Supported	Supported	-

2.4.6 Function Specifications

Item	Specification					
	Easy321-3624ER	Easy321-2416ER	Easy321-3624TN/TP	Easy321-2416TN/TP	Easy511-3624TN	Easy511-2416TN
Programming language	LD, ST, SFC, and FB/FC function (LD)					
Program conversion tool	Used to switch programs of H1U, H2U, or H3U to Easy series PLC quickly.					
Subprogram supported	Subprogram encryption is supported. Separate network encryption is not supported.					
Program encryption (function block encryption)	FB/FC program encryption					

<table>
<tr><th colspan="2" rowspan="2">Item</th><th colspan="6">Specification</th></tr>
<tr><th>Easy321-3624ER</th><th>Easy321-2416ER</th><th>Easy321-3624TN/TP</th><th>Easy321-2416TN/TP</th><th>Easy511-3624TN</th><th>Easy511-2416TN</th></tr>
<tr><td colspan="2">Program modification during operation</td><td colspan="6">Online modification is supported, in which all instructions can be modified online. However, configurations cannot be modified online. Subprograms cannot be deleted online.</td></tr>
<tr><td colspan="2">Cam, gear, and interpolation</td><td colspan="2">Not supported</td><td colspan="4">Supported</td></tr>
<tr><td colspan="2">Project configuration software</td><td colspan="6">Autoshop</td></tr>
<tr><td rowspan="3">User program upgrade</td><td>USB</td><td colspan="6">Supports Type-C interface for PLC program upload/download and monitoring without external power supply.</td></tr>
<tr><td>Micro SD</td><td colspan="6">Supports Micro SD card user program download. For details, see “8.3.2 Downloading User Program from Micro SD Card” on page 95.</td></tr>
<tr><td>HMI (Inovance)</td><td colspan="6">Supports user program download.</td></tr>
<tr><td rowspan="2">Firmware upgrade/ programming</td><td>USB</td><td colspan="6">Supports Type-C interface for PLC firmware upgrade/programming without external power supply.</td></tr>
<tr><td>Micro SD</td><td colspan="6">Supports user program upgrade.</td></tr>
<tr><td colspan="2" rowspan="2">Other features</td><td colspan="4">The GE21-RTU card can be used to quickly configure Easy321 as smart I/O to serve as a PN slave. For details, see “6.1 PN Coupler Mode” on page 76.</td><td colspan="2">-</td></tr>
<tr><td colspan="6">The number of I/O points on the PLC can be expanded, as described in “6.3 Expansion of Local I/O Points” on page 79.</td></tr>
</table>

2.5 Environmental Specifications

Item	Specification
Installation/Operating environment	Free from conductive dust, conductive fibers, explosive dust, flammable gases, water mist/greasy dirt, corrosive dust/gases, strong vibration, and repetitive shock
Altitude	≤ 2000 m
IP rating	IP20
Pollution degree	2
Immunity	4 kV for AC power cables and 2 kV for DC power cables (IEC61000-4-4)
Overvoltage category	Relay model: II; non-relay model: I
EMC immunity level	Zone B, IEC61131-2
ESD protection level	Contact discharge +/-6 kV, air discharge +/-8 kV
Vibration resistance	• Application scenario: Tested according to IEC60068-2-6. 3.5 mm amplitude at 5 Hz to 8.4 Hz; 1 g gravitational acceleration at 8.4 Hz to 200 Hz; in ten cycles/axes • Transportation scenario: Tested according to IEC60068-2-64, 0.01 g^2/Hz power spectral density at 5 Hz to 100 Hz; 0.001 g^2/Hz power spectral density at 200 Hz; 1.14 g Grms
Shock resistance	Application/Transportation scenario: Tested according to IEC60068-2-27; 15 g peak acceleration, 11 ms pulse width, 18 cycles in total in X, Y and Z axial directions
Ambient temperature/humidity	• Temperature: Single PLC: -20°C to +60°C Parallel PLCs: -20°C to +55°C • Humidity: < 95% RH (30°C), without condensation

Item		Specification
Storage temperature/humidity		• Temperature: -20°C to +60°C • Humidity: < 95% RH (30°C), without condensation
Transportation temperature/ humidity		• Temperature: -40°C to +70°C • Humidity: < 95% RH (40°C), without condensation
Installation mode and limit	Mounting method	For details, see *"3.1.2 Mounting Method" on page 31*.
	Installation limit	For details, see *"2.6 Derating Specifications" on page 25*.

Note

The temperature required for vertical installation is 10°C lower than that for horizontal installation.

2.6 Derating Specifications

For requirements on the installation/ambient environment, see *"2.5 Environmental Specifications" on page 24*.

Type	Item	Input/output load derating curve	
Single PLC (with expansion card)	• Single PLC: Without expansion module and with two expansion cards (not derated) • Operating conditions: CPU load rate of 80% or below • The installation temperature for a vertically-mounted PLC is 10℃ lower than a horizontally-mounted PLC.	Horizontal installation	Derate according to the actual ambient temperature on site, as shown in the following figure. • **Input derating:** Full load at 50℃, input points derated to 75% at 60℃ (namely < 27 points for models with 36 inputs or < 18 points for models with 24 inputs) • **Output derating:** Full load at 50℃, output points derated to 75% at 60℃ (namely < 18 points for models with 24 outputs or < 12 points for models with 16 outputs) 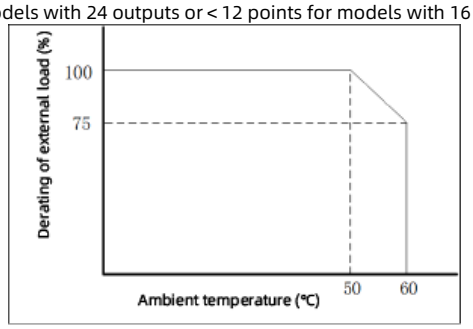
		Vertical installation	Derate according to the actual ambient temperature on site, as shown in the following figure. • **Input derating:** Full load at 40℃, input points derated to 75% at 50℃ (< 27 points for models with 36 inputs or < 18 points for models with 24 inputs) • **Output derating:** Full load at 40℃, output points derated to 75% at 50℃ (namely < 18 points for models with 24 outputs or < 12 points for models with 16 outputs) 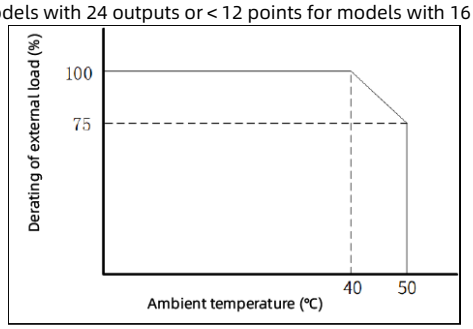

Type	Item	Input/output load derating curve	
Parallel PLCs (with expansion card)	• Parallel PLCs: With expansion module and two expansion cards (not derated) • Operating conditions: CPU load rate of 80% or below • The installation temperature for a vertically-mounted PLC is 10℃ lower than a horizontally-mounted PLC.	Horizontal installation	Derate according to the actual ambient temperature on site, as shown in the following figure. • **Input derating:** Full load at 45℃, input points derated to 75% at 55℃ (< 27 points for models with 36 inputs or < 18 points for models with 24 inputs) • **Output derating:** Full load at 45°C, output points derated to 75% at 55°C (namely < 18 points for models with 24 outputs or < 12 points for models with 16 outputs) 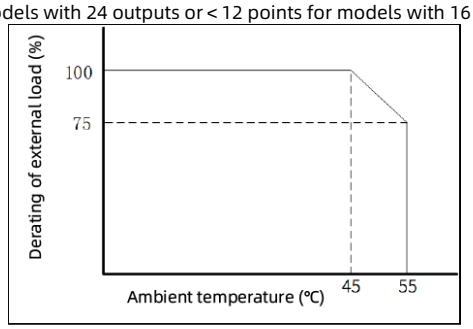
		Vertical installation	Derate according to the actual ambient temperature on site, as shown in the following figure. • **Input derating:** Full load at 35℃, input points derated to 75% at 45℃ (< 27 points for models with 36 inputs or < 18 points for models with 24 inputs) • **Output derating:** Full load at 35°C, output points derated to 75% at 45°C (namely < 18 points for models with 24 outputs or < 12 points for models with 16 outputs) 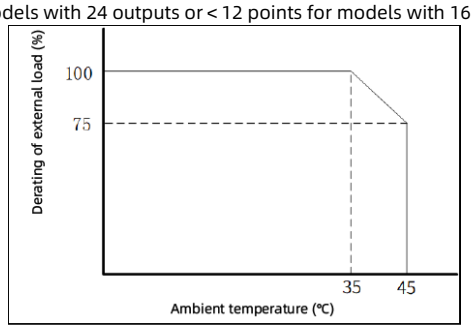

Note

Up to eight GL20 modules are supported without a GL20-PS2 power supply and up to 15 GL20 modules can be expanded with a GL20-PS2 power supply.

2.7 Components

Components of Easy321/Easy511 models

40-point/60-point models

The components are the same for all models. The following takes Easy511-3624TN models as an example.

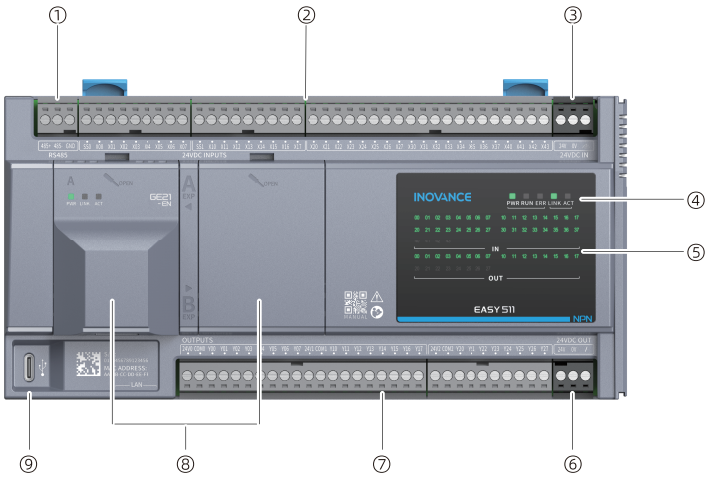

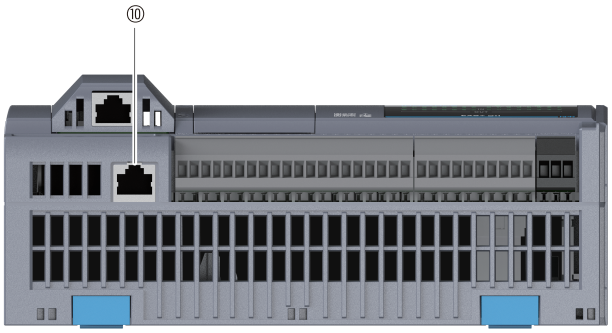

No.	Terminal type	Symbol	Assignment
①	RS485 terminal	-	For details, see *"4.4.2 Terminal Assignment" on page 64*.
②	DI terminal	-	For details, see *"4.3.4.1 Terminal Assignment of 60-point Model" on page 52* *"4.3.4.2 Assignment of 40-point Model Terminals" on page 56*.
③	Input power supply terminal	-	For details, see *"4.3.3 Assignment of Power Supply Terminals" on page 51*.
④	Signal indicator	-	For details, see *"7.2.2 Offline Diagnosis with Signal Indicators" on page 81*.
⑤	I/O indicator	-	For details, see *"7.2.2 Offline Diagnosis with Signal Indicators" on page 81*.
⑥	Output power supply terminal	-	For details, see *"4.3.3 Assignment of Power Supply Terminals" on page 51*.
⑦	DO terminal	-	For details, see *"4.3.4.1 Terminal Assignment of 60-point Model" on page 52* and *"4.3.4.2 Assignment of 40-point Model Terminals" on page 56*.
⑧	Expansion card slot	A/B	Expansion card slot for function expansion (The GE21-EN card is provided as standard in the card slot A of Easy511. For details about expansion card options, see *"9.3 Appendix 3: Applicable Products" on page 99*.)
⑨	Type-C interface		Communication with PC
⑩	Network port	-	• Easy511 model: EtherCAT interface, which can be switched to Ethernet protocol • Easy321 model: RJ45 interface for Ethernet communication

GE21-EN Ethernet card

The Easy511 series PLC is equipped with GE21-EN Ethernet card as standard by default. The following table describes the components of the GE21-EN Ethernet card.

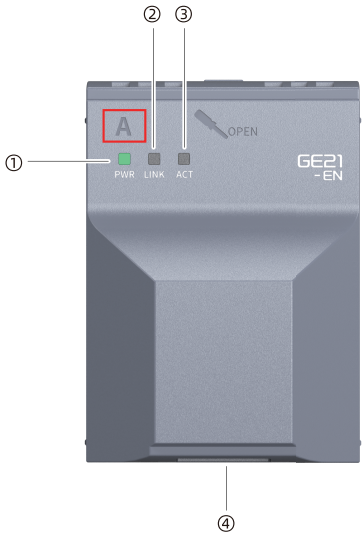

No.	Terminal type	Mark	Assignment	Indicator color	Note
①	Power supply indicator	PWR	Power supply OK	Yellow-green	• Steady ON: Power supply OK • OFF: Power supply not OK
②	Ethernet LINK indicator	LINK	Connection OK	Yellow-green	• Steady ON: Connected • OFF: Not connected
③	Ethernet ACT indicator	ACT	Communication status	Yellow-green	• Flashing: Communication in progress • OFF: No communication in progress
④	User terminal	-	-	-	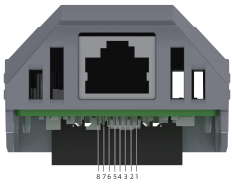 **RJ45 pin** / **Signal description** 1 / TX+ 2 / TX- 3 / RX+ 4 / - 5 / - 6 / RX- 7 / - 8 / -

Note

The letter "A" in the figure indicates that only the card slot A of the PLC is supported.

3 Installation

3.1 Installation Instructions

3.1.1 Introduction

Although this product has been designed based on strict standards, the following installation requirements, such as installation method, installation space, and installation precautions, must still be observed to ensure stable operation of the product.

3.1.2 Mounting Method

Mounting method

The drive can be installed horizontally or vertically. It is recommended to install the drive horizontally. Different installation directions require different operating temperatures and limits. For details, see *"2.5 Environmental Specifications" on page 24*.

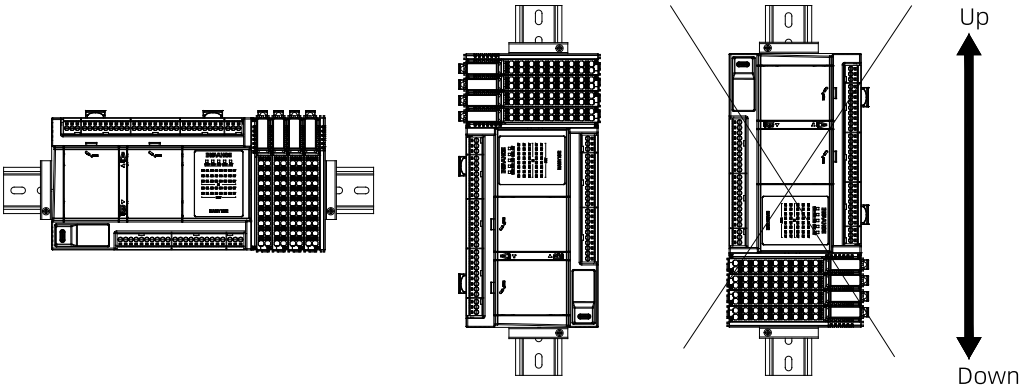

Horizontal installation

Vertial installation with PLC at the bottom

Vertial installation with PLC on the top

Caution

- Face-up or face-down installation is not supported during horizontal installation.
- Observe the following requirements during vertical installation.
  - The PLC must be installed below all I/O modules.
  - Hold the cables with a cable duct to prevent the weight of cables being applied to the lower end plate, which may result in loose of the PLC from the DIN rail, resulting in malfunction.

Heat dissipation requirements

This PLC dissipates heat by natural convection. To ensure proper ventilation and reserve sufficient wiring space, keep a minimum clearance around the product. The following figure shows the clearance ((in mm) required for horizontal and vertical installation.

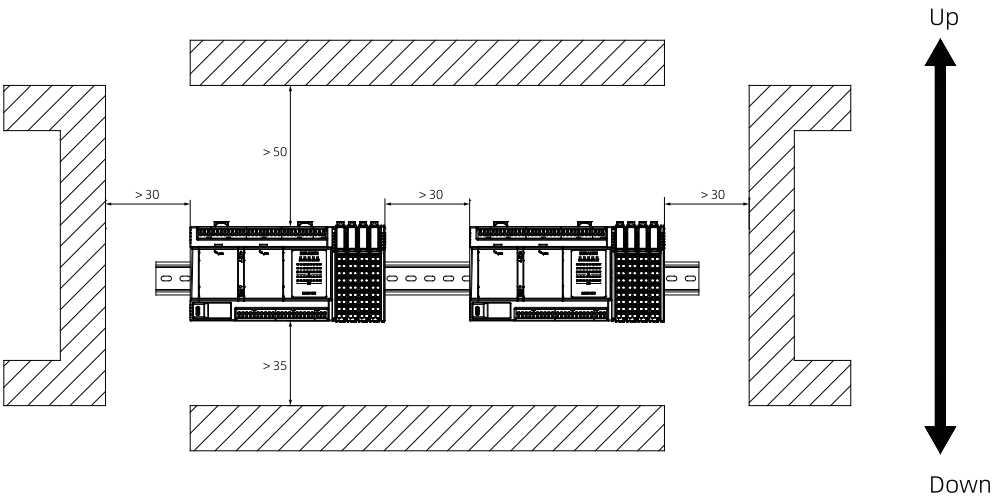

Horizontal installation

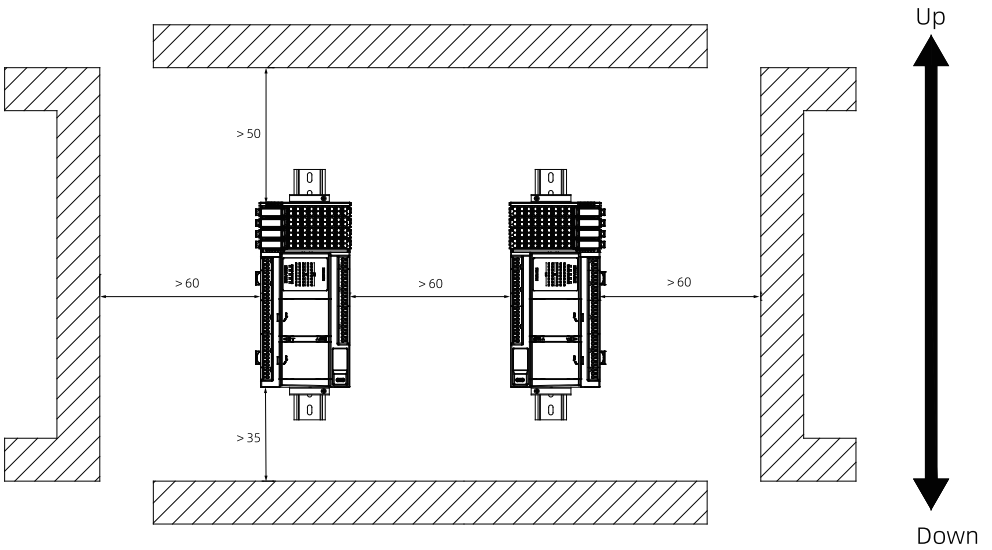

Vertical installation

Caution

Do not install the product directly above a heat-generating device (such as a heater, transformer, or large resistor). Keep the product away from the heating source by at least 100 mm.

3.1.3 Installation Space

Installation dimensions

Dimensions of different models are consistent except the width. Detailed dimensions are shown below (in mm).

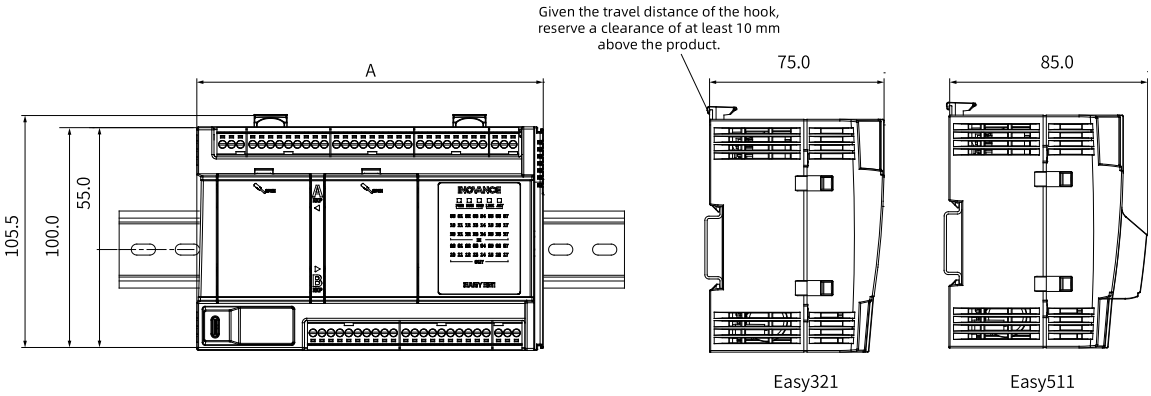

Model	Width A/mm
Easy321-3624ER	205
Easy321-3624TP	205
Easy321-3624TN	205
Easy511-3624TN	205
Easy321-2416ER	155
Easy321-2416TP	155
Easy321-2416TN	155
Easy511-2416TN	155

Dimensions of the end cover is shown below (in mm).

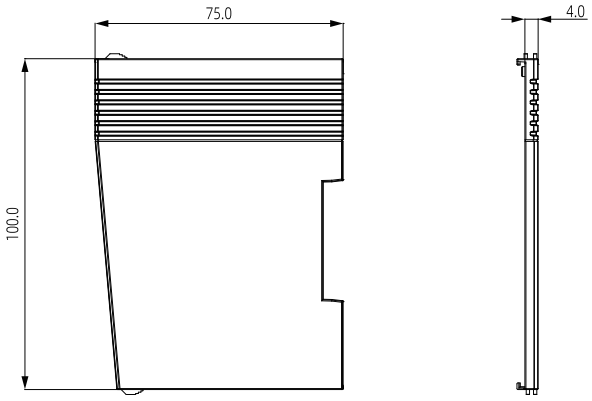

Example for calculating the mounting width

The following takes one Easy321-2416ER + four GL20-0008ETN expansion modules + one end cover + two end plates as an example (in mm). Total installation width = 155 mm + (12 x 4) mm + 4 mm + (8.5 x 2) mm = 224 mm

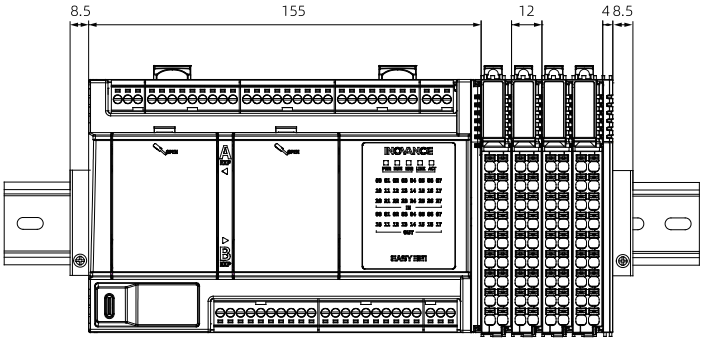

The following shows the width of each expansion module (one model as an example) in mm.

Model	Width/mm
GL20-0008ETN	12
GL20-0008ER	24
GL20-3232ETN	36
End plate	8.5

Space reserved for cables

When installing the product, reserve enough space for connecting cables, as shown in the following figure (in mm).

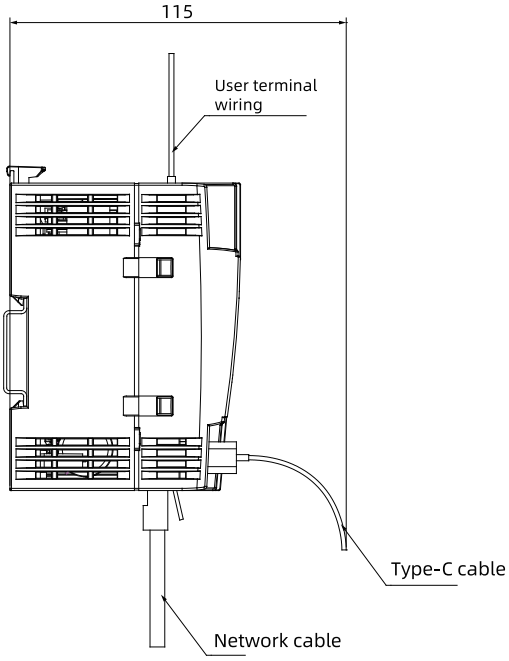

3.1.4 Installation Precautions

To ensure the reliability and functional integrity of the product, observe the following requirements when installing the product.

The installation environment of this product must meet the following requirements.

- Keep the product away from sunlight.
- Do not expose the product to conductive filaments or dust, including but not limited to carbon fiber, gold bonding wire, and graphite powders, metal powder, and toner.
- Do not expose the product to contaminated liquids, including but not limited to water/oil mist, cutting fluid, electroplating fluid, acid mist, hydrogen peroxide, detergent, and salt mist.
- Do not expose the product to corrosive gases, including but not limited to hydrogen sulfide, sulfur dioxide flow, ammonia, chlorine, hydrogen chloride, and hydrogen fluoride.
- Do not expose the product to explosive gas or dust.
- Do not install the product on a device or machine with vibration source or shock source.
- Keep the product away from heat sources such as the heater.

- Do not install the product in an environment with condensation or where the temperature changes dramatically.

Take proper and adequate isolation measures when installing the product in the following environments.

- Environments that affected by static electricity or other forms of noise
- Environments that affected by strong electromagnetic fields
- Environments that exposed to radiation
- Environments that close to the power supply cables or large AC drives, high-power high-frequency generators, large contactors, and welding machines

Precautions when installing the product

- Before installing or removing the PLC and modules, ensure that they have been powered off.
- Do not hot swap the modules. This may lead to PLC restart, and user data loss or damage.
- To avoid damage to the PLC and modules, take measures to prevent the enclosure or terminals of the PLC and modules from being dropped to subject to shocks.

3.2 Installation Preparation

Take an Easy321-2416ER PLC as an example. The following table shows the PLC, accessories, and tools that needed for installation.

PLC, accessories, and tools	Specification	Quantity	Diagram
PLC	-	1	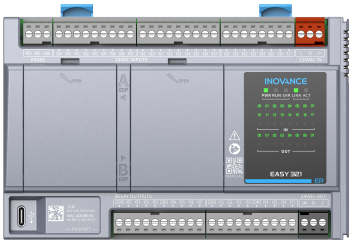
Expansion module	-	Several	-
Expansion card	-	1/2	-
DIN rail	Compliant with IEC60715 standard (35 mm in width and 1.0 mm in thickness). For details, see *"9.1 Appendix 1: Dimension Diagram" on page 97*.	1	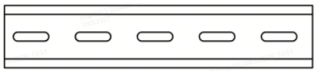
End plate	At least two end plates (a pair) to be used together with the DIN rail	2	
Screws (mounting rail)	M4	Several	-

PLC, accessories, and tools	Specification	Quantity	Diagram
Phillips screwdriver	5 mm in radius	1	
Slotted screwdriver	2.5 mm to 3.0 mm in head width	1	

3.3 Installation Process

3.3.1 Installing the Guide Rail

Caution

If the thickness of the DIN rail is not as required, the product cannot fit in or function properly as the DIN rail mounting hook does not work.

Operation procedure

Tighten the screws on the DIN rail with a Phillips screwdriver. Secure with a M4 screws every 70 mm or less along the rail at a tightening torque of 12 kgf·cm.

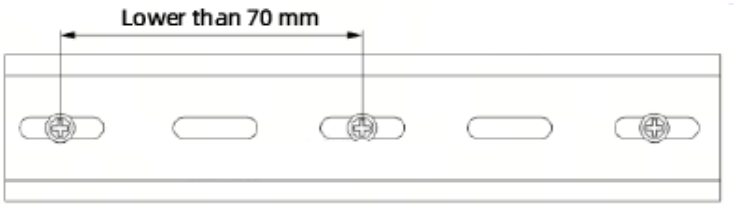

3.3.2 Installing the PLC

Operation procedure

1. Remove the end cover in the direction indicated by the arrow, as shown below.

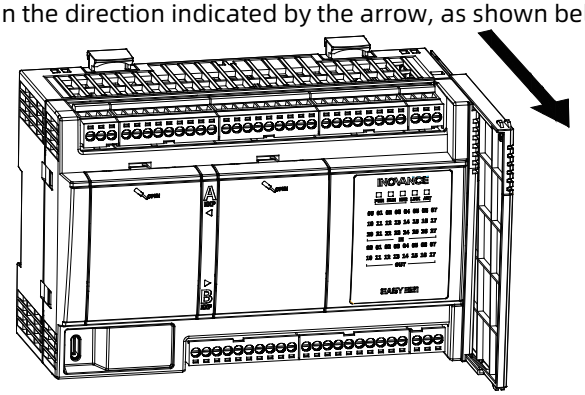

2. Check that the DIN rail mounting hook is unlocked, as shown below.

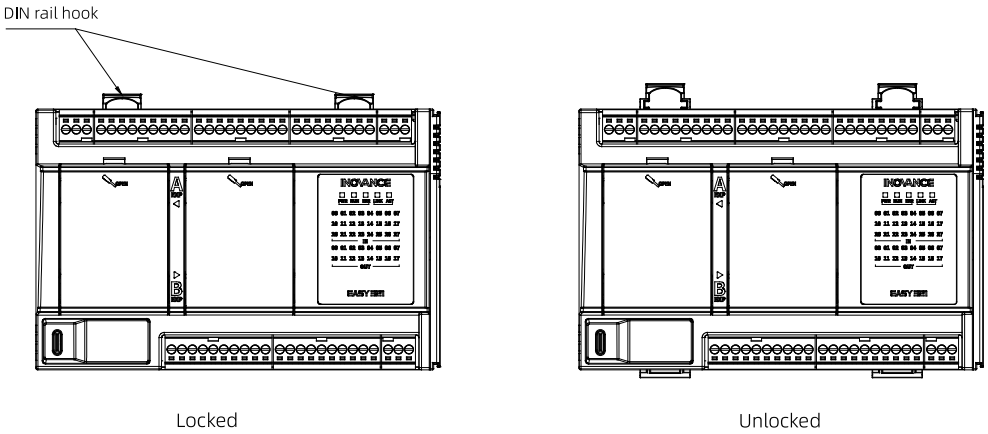

3. Align the PLC with the DIN rail and push it in the direction indicated by the arrow until you hear a clicking sound, as shown below.

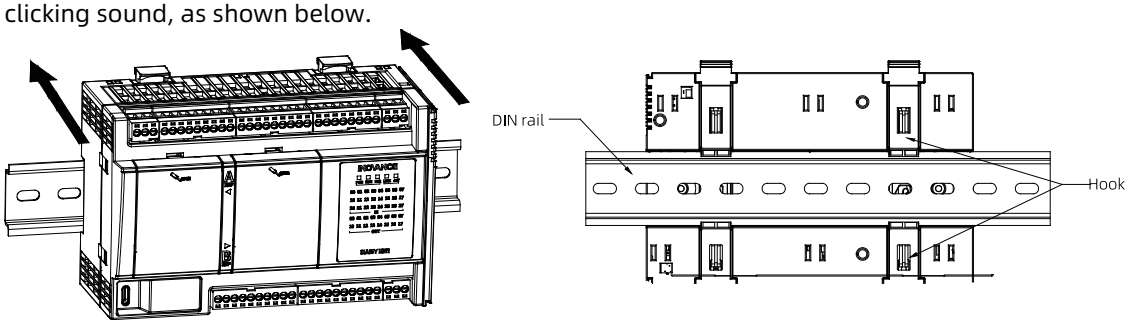

4. Make sure the DIN rail mounting hook of the PLC is locked. The locked and unlocked states of the mounting hook are shown below.

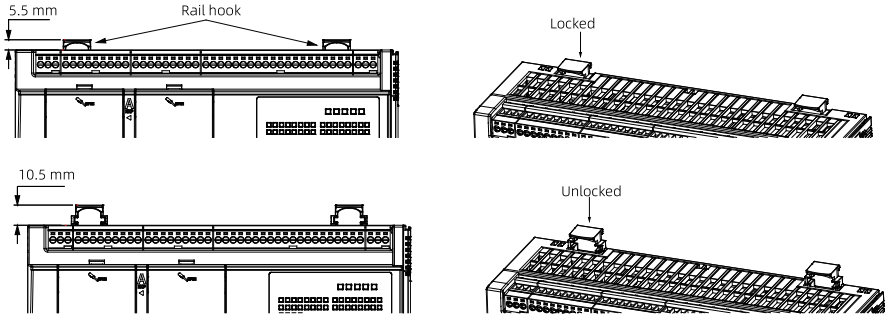

- If the mounting hook is pressed down, it is locked.
- If the mounting hook is lifted up, it is unlocked. To lock the module to the DIN rail, press down the mounting hook.

3.3.3 Installing the Expansion Card

For details on installation of each expansion card, see section 2.3 Installation Instructions in the following user guides.

- GE21-CAN-485 Communication Expansion Card User Guide
- GE21-RTU Coupler Configuration Card User Guide
- GE21-TF-RTC Memory Expansion Card (Integrated with RTC) User Guide
- GE21-4AD1DA-I Analog Input and Output Current-Type Expansion Card User Guide
- GE21-8DI Digital Input Expansion Card User Guide
- GE21-8DO-TN Sink-Type Transistor Output Expansion Card User Guide

- GE21-232 485-RTC Communication Expansion Card User Guide
- GE21-8DO-TP Source Transistor Output Expansion Card User Guide
- GE21-4AD1DA-V Analog Input and Output Voltage-Type Expansion Card User Guide

3.3.4 Installing the Expansion Module

1. Check that the DIN rail mounting hook of the expansion module is unlocked, as shown below.

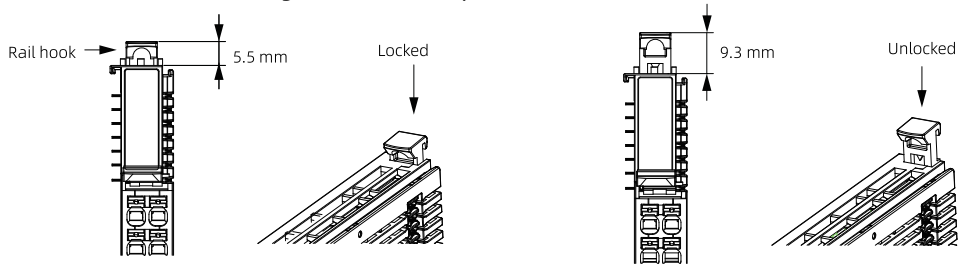

2. Mate the expansion module with the guide rails at the top and bottom of the PLC and press the module in the arrow direction until you hear a clicking sound, which indicates that the module has been installed in place, as shown below.

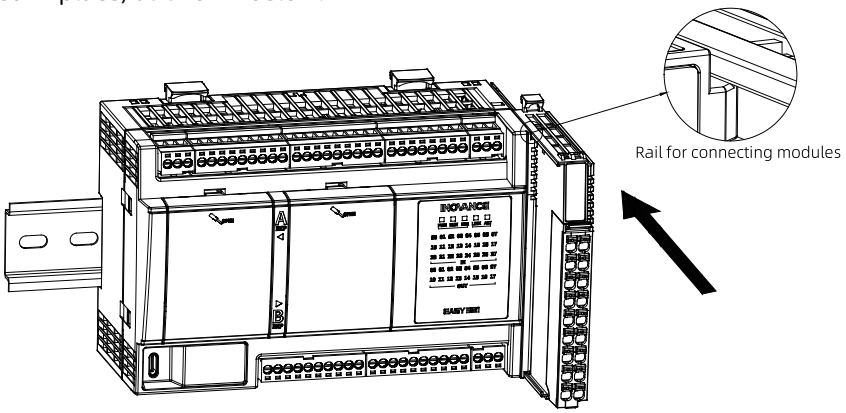

3.3.5 Installing the End Cover

1. Align the end cover with the guide rail of the last expansion module and install it in the arrow direction, as shown below.

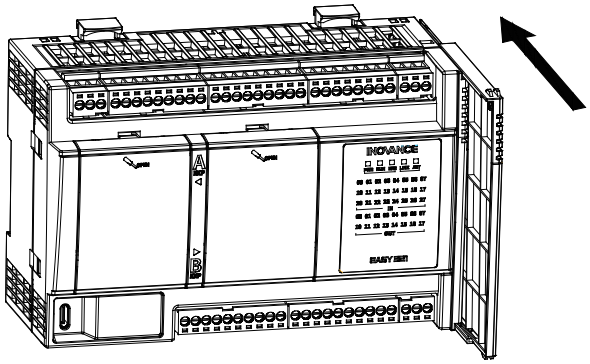

2. Align the end cover with the end of the expansion module to prevent the metal pin from being exposed, as shown below.

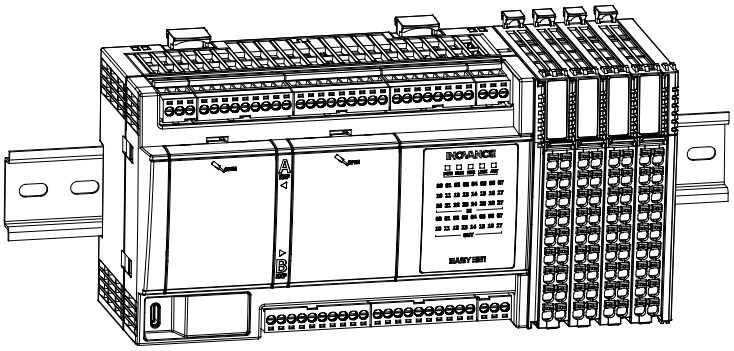

3.3.6 Installing the End Plate

To mount the end plate, hook the bottom of it to the bottom of the DIN rail, rotate the end plate to hook the top of the end plate to the top of the DIN rail, and then tighten the screws with a Phillips screwdriver to lock the end plate in place, as shown below.

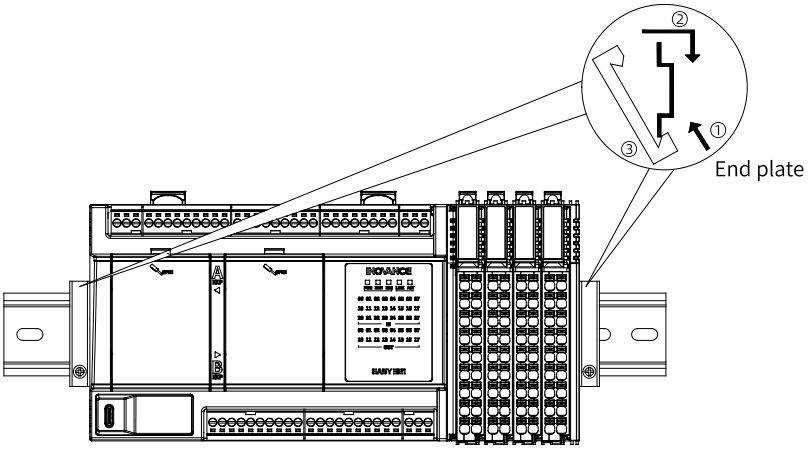

3.4 Post-installation Inspection

No.	Item	Compliance
①	The rail mounting hook of the PLC and expansion module are in the locked state.	
②	The end plates on both sides are securely locked.	
③	No unwanted objects are left on the ventilation surfaces.	
④	The installation environment meets the environmental requirements.	

4 Wiring

4.1 Wiring Instructions

4.1.1 Introduction

The purpose of standard wiring practices in industrial environments is to reduce electromagnetic interference (EMI) effects on equipment and systems, ensuring stable operation of industrial control systems and the accuracy of data. Although Inovance has designed industrial products to meet harsh environments, proper external wiring and cable routing may still be considered during use.

4.1.2 Basic EMC information

Electromagnetic interference sources exist only when the normal operation of sensitive devices is affected. The three elements that constitute interference are interference sources, transmission paths, and sensitive devices.

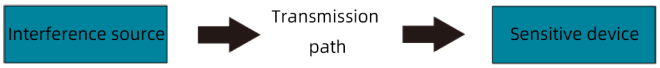

EMC problems root in the system. This chapter describes how to reduce the impact of interference in the transmission path. Common solutions include shielding, isolation, and proper wiring.

Different coupling modes can be handled in different ways. The following describes the causes and solutions of interference in several common coupling modes.

Common impedance coupling

- Cause: The grounding cable is used as one of the signal circuit paths. The impedance of the grounding cable is about hundreds of nH/m. The voltage difference in the grounding cable caused by interference on system A is superimposed to system B.
- Solution: Perform single-point grounding separately.

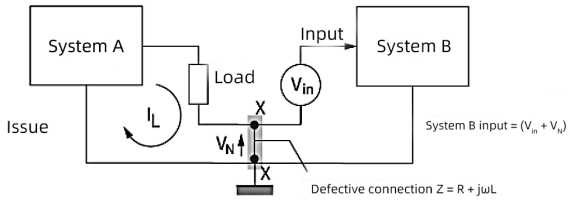

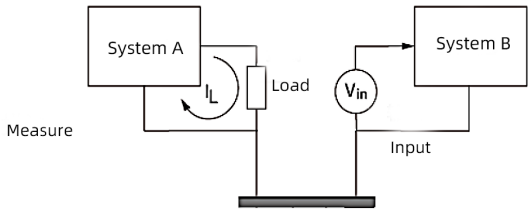

Common power supply coupling

- Cause: Any change in the power supply current required by circuit 2 can affect circuit 1. Interference of circuit 2 can easily disturb circuit 1.
- Solution:
  - Make sure that circuit 2 draws power directly from the power supply output terminal.
  - Use isolation transformers or filters.

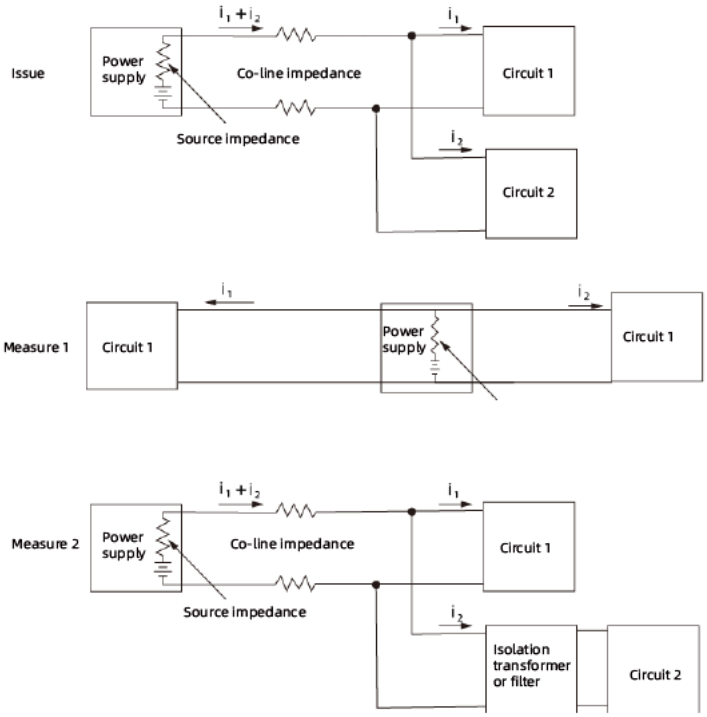

Capacitive coupling

- Cause: Different signal cables are routed in parallel, with air being the medium, which can result in capacitive coupling due to crosstalk.
- Solution: Shield the signal and increase the clearance between signal cables.

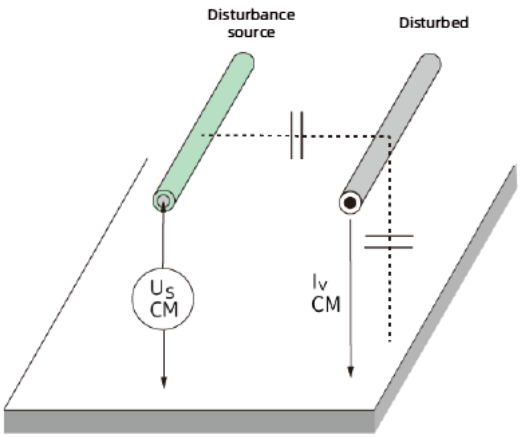

Inductive coupling

1. Cause: When the variable current flows through the cable, a magnetic field can be generated around the cable. The sensitive circuit in the magnetic field can generate an inductive voltage current, which may affect the circuit.
2. Solution: Increase the clearance between cables to reduce mutual inductance and ground both ends of the shielded cable.

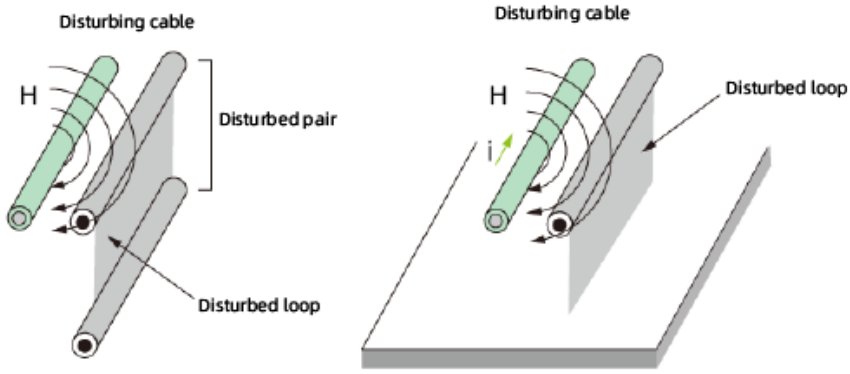

4.1.3 Cable Routing Requirements

Routing requirements

- Routing of main circuit
  The power supply input cable of the main circuit and motor cables can generate strong electromagnetic interference. To avoid electromagnetic interference caused by long-distance parallel routing between the disturbing cable and control circuit cables, keep a clearance of at least 30 cm between main circuit cables and signal cables during routing. Main circuit cables include the input R/S/T cables, output U/V/W cables, DC bus, and braking cables. Signal cables include the I/O signal cables and communication cables. The spiral cable ducts must be in good connection and well grounded. The aluminum cable duct ensures equipotential bonding of the equipment. Both PLCs and I/O modules must be bonded properly with the system (mechanical systems or devices). Apply protective coating to installation surfaces while maintaining full contact with the conductive metal.

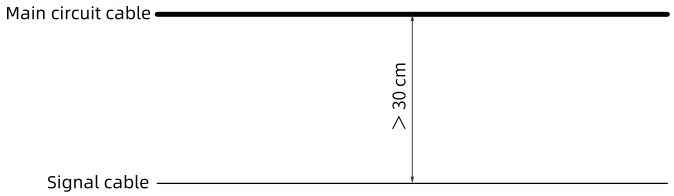

- I/O signals include analog input (AI) signals, analog output (AO) signals, digital input (DI) signals, digital output (DO) signals, and relay output signals. To avoid interference to the I/O signals, keep the I/O signal cables at least 30 cm away from the main circuit cables (R, S, and T cables and U, V, and W cables) and other power cables or power supply cables.

Routing recommendations

- Routing disturbing cables and sensitive cables

Route cables that transmit different types of signals through different routes. Separate the disturbing cables from sensitive cables by a clearance of at least 30 cm. When these two types of cables must be cross-connected, make sure that the cross-connection angle is 90 degrees to prevent interference, as shown below.

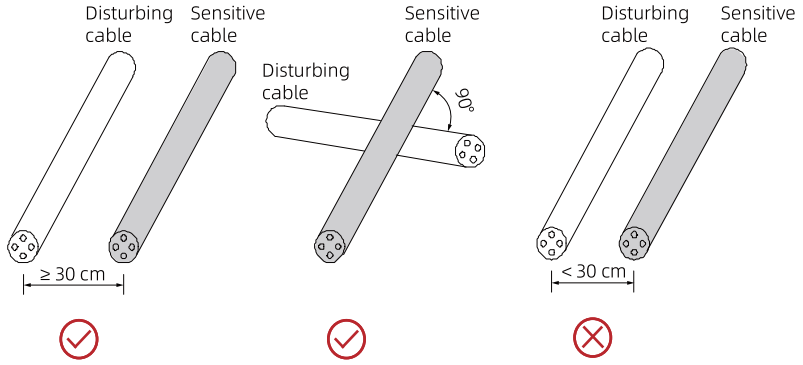

- Routing cables that transmit different types of signals
  Route cables that transmit different types of signals through different routes and separate different types of signals with equipotential signals. When routing cables that transmit the same type of signals, lay equipotential signal cables to the outer layer and lay equipotential bondings as many as possible in the middle if possible, as shown in the following figure.

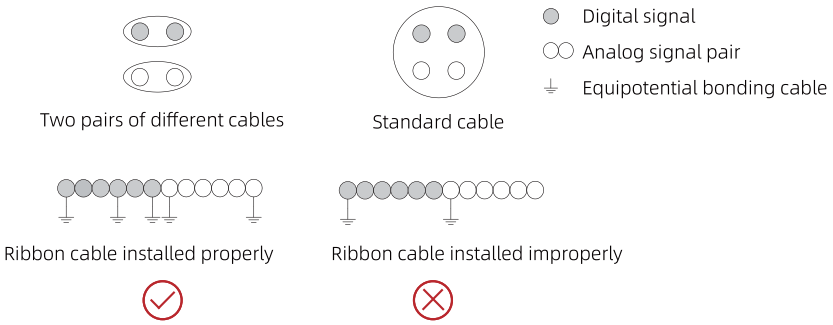

- Routing multi-conductor cables
  For multi-conductor cables, it is recommended that one cable transmits one type of signals. If one cable is used to transmit different types of signals, use the cable with conductors shielded, as shown in the following figure.

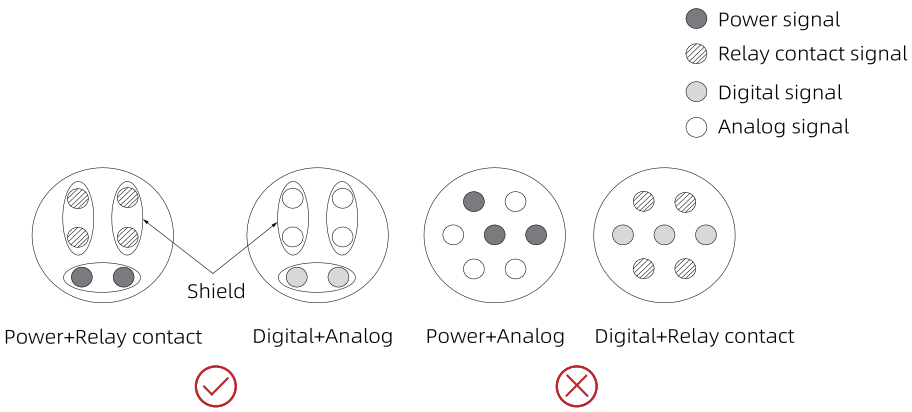

Connect the spare or unused conductors in a multi-conductor cable to the equipotential bondings, as shown below. Do not leave these conductors unconnected.

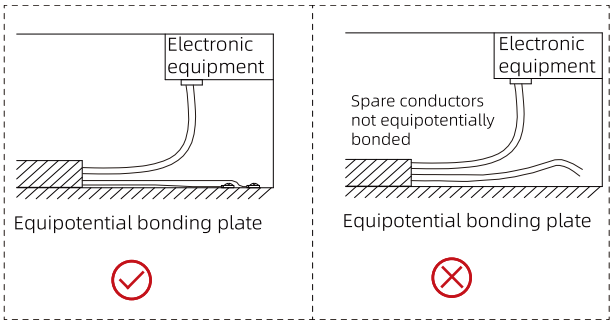

- Avoiding separated wiring loop

  For cables that transmit low-level sensor signals and common cables that transmit relay signals, lay them close to each other to avoid a large loop area. Use twisted pair cables for analog signals. Lay digital signal cables close to each other, as shown below.

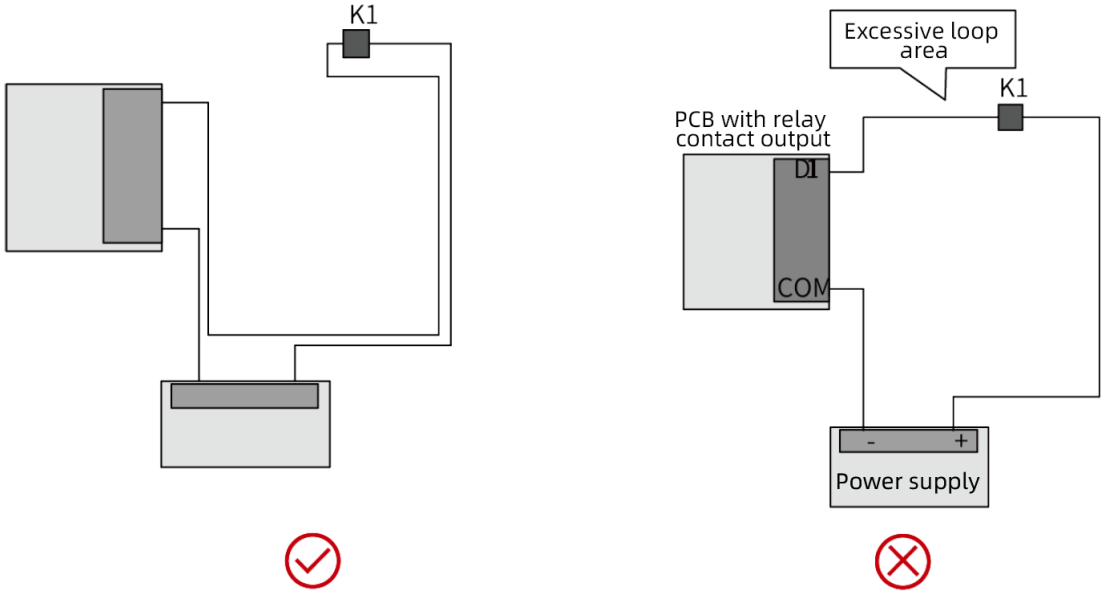

- Laying multiple types of cables

  For cables of different types, route the cables along the equipotential metal plate. To enhance the internal EMC performance, separate different types of cables or separate cables with metal separators (recommended) in the same metal (zinc-iron or stainless steel) duct, as shown below.

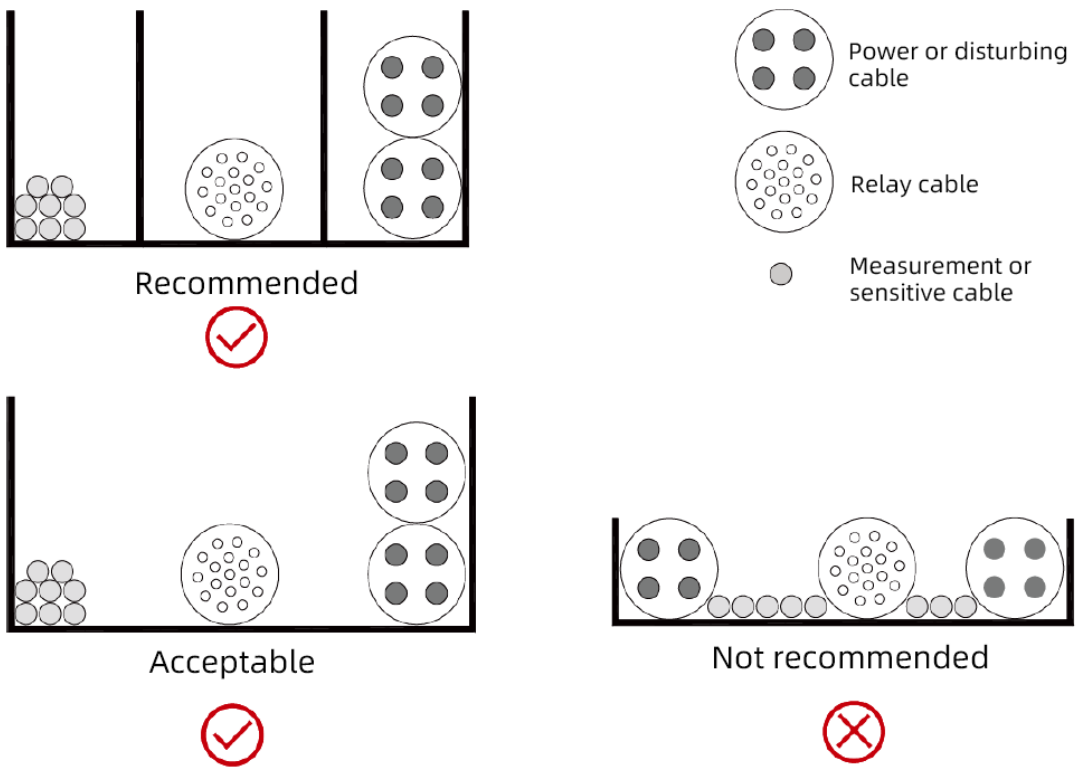

4.1.4 Grounding Requirements on Shielded Cables

Shielded cables can reduce interference in the magnetic, electric, or electromagnetic fields and transfers the interference current from the shield to the ground.

Minimize the length of the unshielded part of a shielded cable, and connect the shield to the nearest PE terminal. If the unshielded part is too long, the cable conductor is prone to signal interference. For modules without dedicated PE terminal, connect the shield to an external PE terminal, as shown below.

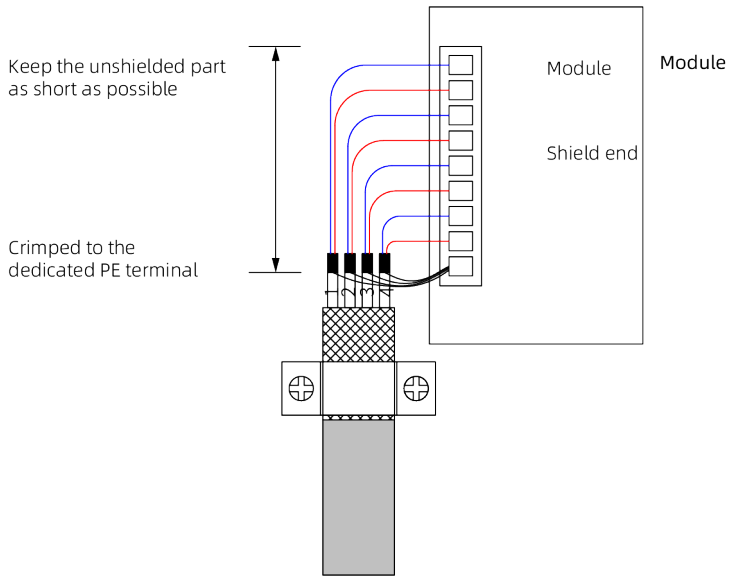

4.1.5 Equipotential Grounding Requirements

Equipotential grounding connects the electrical equipment and external conductive parts to the same potential. This not only prevents electric shock but also complies with EMC requirements.

- To ensure proper grounding of the product, observe the following requirements.
  - Ensure that the grounding terminal is properly grounded in accordance with the relevant electrical regulations of the country or region, preventing improper operation or damage to the equipment. The grounding terminal cannot be used as the neutral (N) terminal of the power supply.
  - Ensure that the protective grounding conductor meets the technical specifications and local safety standards. Keep the grounding cable as short as possible. The protective grounding conductor must be made of yellow-green copper conductor and cannot be connected in series with circuit breakers or other switching devices.
  - Observe the grounding requirements of all the devices as improper grounding can lead to malfunction.
  - Install the device on a conductive metal surface. Ensure that the whole conductive bottom of the device is in proper contact with the mounting surface.
  - Fasten the grounding screws with the recommended tightening torque.
- Grounding requirements for multiple devices
  The following shows parallel grounding of multiple devices.

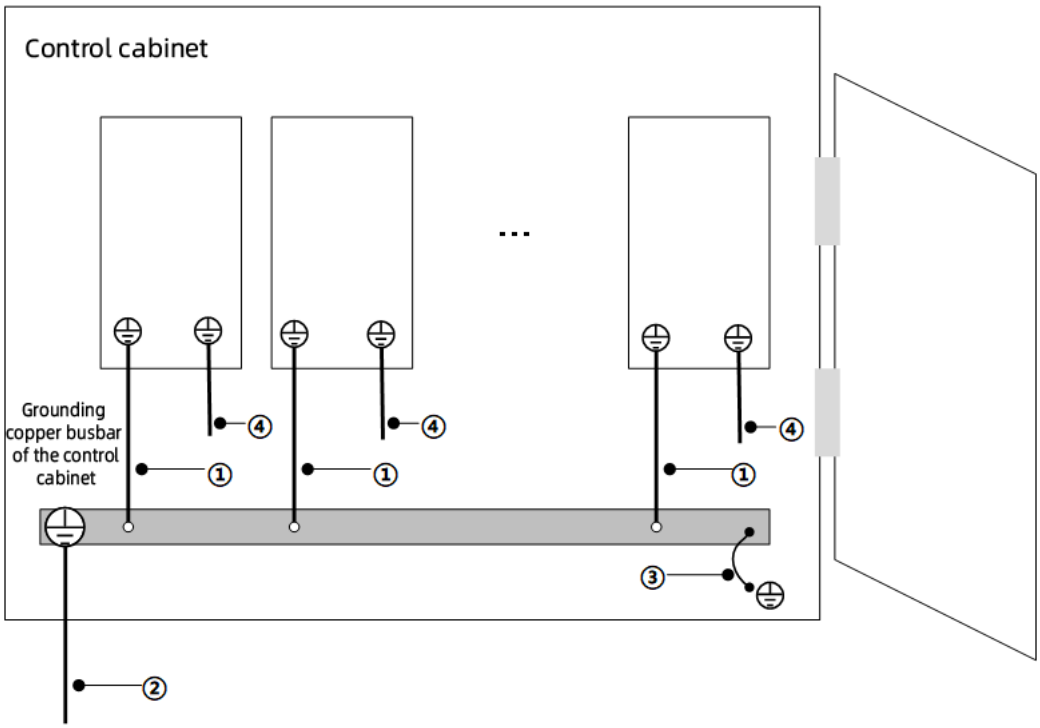

No.	Wiring description
①	Connect the main circuit input PE terminal to the grounding copper busbar of the control cabinet through the protective grounding conductor.
②	Connect the PE cable on the input power supply end to the grounding copper busbar of the control cabinet.

No.	Wiring description
③	Connect the grounding copper busbar of the control cabinet to the metal enclosure of the control cabinet through the protective grounding conductor.
④	Connect the motor output cable shield to the output PE terminal of the product.

- Grounding of the cabinet

  To suppress interference in a cabinet properly, isolate the interference source from the disturbed equipment during installation. Divide the cabinet into multiple EMC compartments or sub-cabinets based on the intensity of the interference source, and install each device in accordance with the following rules.

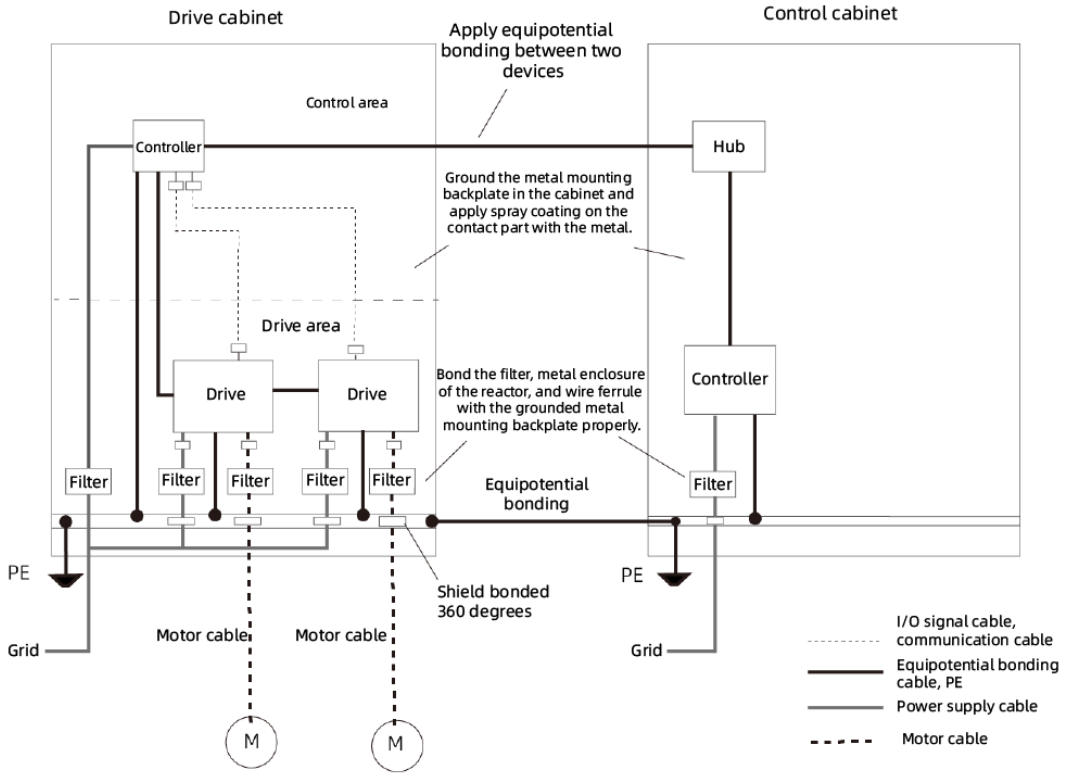

No.	Grounding rules
①	Install the control devices and drive devices into two separate cabinets.
②	If multiple cabinets are used, use grounding cables with a cross-sectional area of at least 16 mm^2 to connect different cabinets, therefore realizing equipotential bonding between the cabinets.
③	Place the devices in different areas in the cabinet according to the device signal intensity.
④	Carry out equipotential bonding for the devices in different areas of the cabinet.
⑤	Shield all communication (for example, RS485) and signal cables that routed out from the cabinet.
⑥	Install the power supply input filter close to the cabinet input interface.
⑦	Apply spray coating to all grounding points in the cabinet for protection.

4.1.6 Surge and Overvoltage Protection

The surge protection device (SPD) is installed on the input side of the PLC to ensure that electrical systems and important electrical and electronic equipment are protected from damage caused by

surge/overvoltage. The SPD is mainly used to limit transient overvoltage and operational overvoltage caused by surge in power supply and signal systems. Lightning surges can be transmitted to the PLC through the power supply or signal cable. When a lightning strike occurs, the ground potential increases, which may damage the device. The induced voltage can be produced in the cable and loop when a pulse electromagnetic field is generated by a lightning strike on the building (or in the vicinity). Therefore, the SPD is a must in addition to external protective measures such as surge protection pins, grounding cables, and grounding devices. External surge protection measures cannot prevent conduction and secondary lightning strike along the lightning inductive surge.

4.2 Connecting Ethernet or EtherCAT Network Cable

4.2.1 Wiring Precautions

Note the following when connecting the Ethernet/EtherCAT network cables.

- Use recommended cables and adapter boards for connection. It is recommended that shielded cables be used as expansion cables to enhance the anti-interference capacity.
- When connecting the cable to the Ethernet/EtherCAT network port of the product, insert the cable securely into the Ethernet/EtherCAT network port until it is locked in place.
- Route communication cables and power cables (high voltage cables or high current cables) through different routes. Do not route communication cables in parallel with power cables.
- Do not place the communication cables near the noise-generating device. If this is unavoidable, take measures to solve the noise problem, such as placing the device in a metal enclosure.
- Do not place the communication cable in environments with high temperature or high humidity.
- Do not place communication cables in environments with excessive dust, oil mist, or other harmful elements.
- The bending radius of the communication cable is limited. Check the bending radius of the communication cable.

4.2.2 Wiring Preparation

Cable requirements

The Ethernet/EtherCAT bus adopts standard RJ45 network port and standard registered jack. Use shielded twisted pairs of Cat 5e or higher and injection cables with iron housing. Use shielded network cable for network data transmission in Ethernet/EtherCAT bus communication. The specifications for shielded network cables are shown in the following table.

Item	Specification
Cable type	Flexible crossover cable, S-FTP, Cat 5e and higher
Double-shielded	Braided shield (coverage: 85%), aluminum foil shield (coverage: 100%)
Standards compliance	EIA/TIA568A, EN50173, ISO/IEC11801 EIA/TI Abulletin TSB, EIA/TIA SB40-A&TSB36
Cross sectional area	AWG26 and above
Conductor type	Twisted pair

Item	Specification
Number of pairs	4
Certification	UL
Environment	• Resistant to industrial oil, corrosive acid and alkali • Ambient temperature: -30°C to +60°C

Note

The cable length between devices cannot exceed 100 m. Failure to comply can lead to signal attenuation, affecting the communication performance.

Recommended cables

Recommended network cables are as follows.

No.	Code	Name	Specifications
1	15040261	Complete cable set - S6-L-T04-0.3-100M network communication cable - 0.3 m (RoHS)	CAT.5e SFTP 26AWG
2	15040262	Complete cable set - S6-L-T04-3.0-100M network communication cable - 3 m (RoHS)	CAT.5e SFTP 26AWG
3	15041960	Complete cable set - S6-L-T04-0.2-100M network communication cable - 0.2 m (RoHS)	CAT.5e SFTP 26AWG
4	15041961	Complete cable set - S6-L-T04-0.5-100M network communication cable - 0.5 m (RoHS)	CAT.5e SFTP 26AWG
5	15041962	Complete cable set - S6-L-T04-1.0-100M network communication cable - 1.0 m (RoHS)	CAT.5e SFTP 26AWG
6	15041963	Complete cable set - S6-L-T04 - 2.0m - 100M network communication cable - 2.0 m (RoHS)	CAT.5e SFTP 26AWG
7	15041964	Complete cable set - S6-L-T04-5.0-100M network communication cable - 5.0 m (RoHS)	CAT.5e SFTP 26AWG
8	15041965	Complete cable set - S6-L-T04-10.0-100M network communication cable - 10.0 m (RoHS)	CAT.5e SFTP 26AWG
9	1504A819	Complete cable set - S6-L-T04-1.5-100M network communication cable - 1.5 m (RoHS)	CAT.5e SFTP 26AWG

4.2.3 Pin Assignment

Ethernet/EtherCAT bus communication can be achieved through CN3 port. The following describes requirements for the communication network cables.

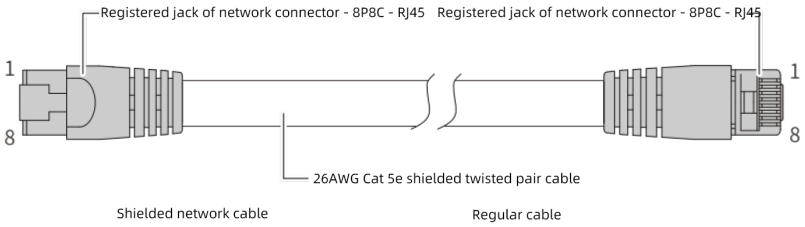

Signal pin assignment

Pin No.	Signal	Signal Direction	Signal description
1	TD+	Output	Data transmission +
2	TD-	Output	Data transmission -

Pin No.	Signal	Signal Direction	Signal description
3	RD+	Input	Data reception +
4	-	-	Not used
5	-	-	Not used
6	RD-	Input	Data reception -
7	-	-	Not used
8	-	-	Not used

4.2.4 Connecting/Disconnecting Cables

Connecting cables

Hold the registered jack with your finger and insert the network cable in the network port direction until you hear a clicking sound, as shown below.

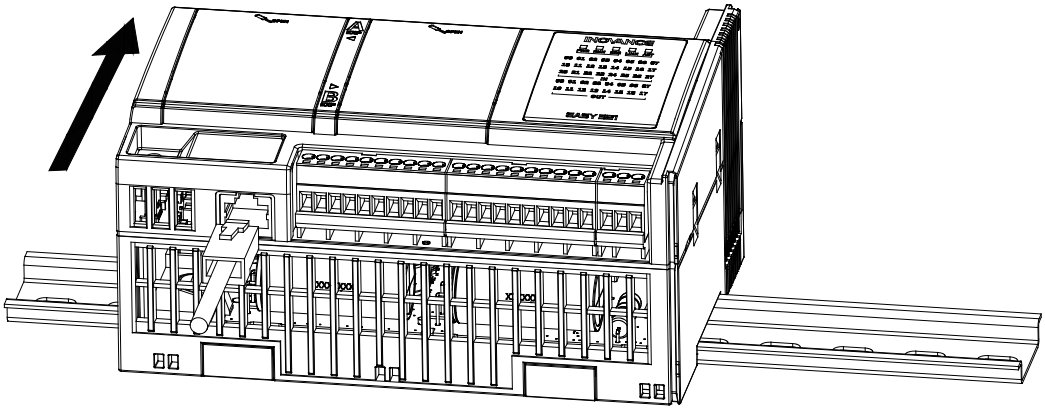

Disconnecting cables

To remove the network cable, press and hold the tail of the registered jack, and then pull it out along the direction parallel with the network port.

4.3 Connecting Power Supply Cables and I/O Terminal Cables

4.3.1 Wiring Precautions

Note the following when connecting the power supply cables.

- Disconnect the external power supply before wiring.
- Route I/O terminal cables and high-voltage/high-current cables that can generate strong interference through different and non-parallel routes.

4.3.2 Wiring Preparation

The following table shows the recommended cables, which can be calculated properly and adjusted as needed. It is recommended to use a three-core non-shielded cable with a maximum length of 20 m. The total extension distance of the high-speed I/O interface extension cable must be lower than 3 m.

Name	Applicable cross sectional area		KST		Suzhou Yuanli	
	GB standard/ mm²	US standard/ AWG	Model	Crimping tool	Model	Crimping tool
Tubular lug	0.3	22	E0308	KST2000L	E0308	YAC-5
	0.5	20	E0508		E0508	
	0.75	18	E7508		E7508	
	1	18	E1008		E1008	
	1.5	16	E1508		E1508	

To use other types of tubular lugs, crimp the lug to the twisted pair according to the shape and dimension requirements shown below.

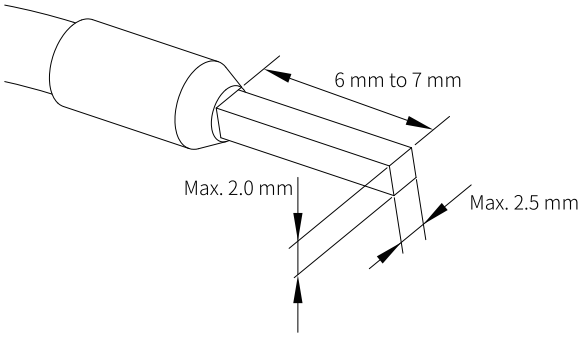

Note

- Add crimping terminals to prevent short circuit of adjacent pins during terminal wiring.
- The maximum tightening torque for tightening wiring screws is 0.45 N·m.

4.3.3 Assignment of Power Supply Terminals

Model	Terminal type	Model	Mark	Silkscreen	Description
40-point/ 60-point model	Input power supply terminal	ER	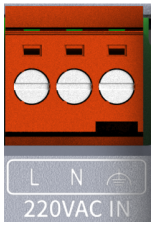	L	Live line
				N	Neutral wire
				⏚	Functional grounding terminal
		TN, TP	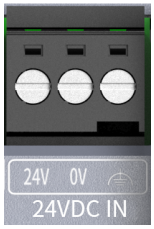	+24V	Connected to the power supply +24VDC.
				0V	Connected to the power supply 0V.
				⏚	Functional grounding terminal
	Output power supply terminal	ER, TN, and TP	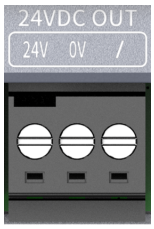	+24V	Connected to the power supply +24VDC.
				0V	Connected to the power supply 0V.
				/	-

4.3.4 I/O Terminal Assignment

The following table describes the terminals of each model.

Terminal type	Model	Description
I/O terminal	Easy321-3624ER	36 single-ended inputs, 8 of which support high-speed 200 kHz input; 24 outputs
	Easy321-3624TN Easy511-3624TN Easy321-3624TP	36 single-ended inputs, 8 of which support high-speed 200 kHz input; 24 outputs, 8 of which support high-speed 200 kHz output
	Easy321-2416ER	24 single-ended inputs, 8 of which support high-speed 200 kHz input; 16 outputs
	Easy321-2416TN Easy511-2416TN Easy321-2416TP	24 single-ended inputs, 8 of which support high-speed 200 kHz input; 16 outputs, 8 of which support high-speed 200 kHz output

4.3.4.1 Terminal Assignment of 60-point Model

60-point ER model

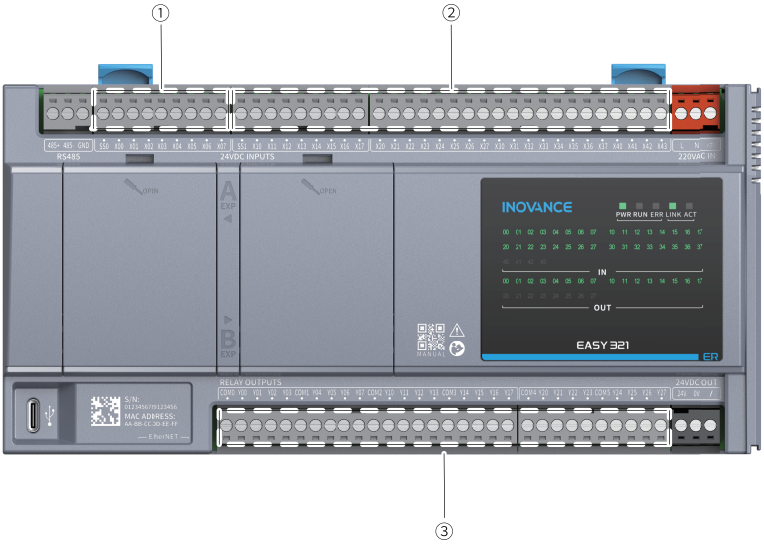

No.	①		②		③	
Terminal type	High-speed DI terminal		Regular DI terminal		Regular DO terminal	
Product model	Terminal signal	Silkscreen	Terminal signal	Silkscreen	Silkscreen	Terminal signal
Easy321-3624ER	High-speed input common terminal	SS0	Regular input common terminal	SS1	COM0	Common terminal 0
	X00 input	X00	X10 input	X10	Y00	Y00 output
	X01 input	X01	X11 input	X11	Y01	Y01 output
	X02 input	X02	X12 input	X12	Y02	Y02 output
	X03 input	X03	X13 input	X13	Y03	Y03 output
	X04 input	X04	X14 input	X14	COM1	Common terminal 1
	X05 input	X05	X15 input	X15	Y04	Y04 output
	X06 input	X06	X16 input	X16	Y05	Y05 output
	X07 input	X07	X17 input	X17	Y06	Y06 output
	-	-	X20 input	X20	Y07	Y07 output
	-	-	X21 input	X21	COM2	Common terminal 2
	-	-	X22 input	X22	Y10	Y10 output
	-	-	X23 input	X23	Y11	Y11 output
	-	-	X24 input	X24	Y12	Y12 output
	-	-	X25 input	X25	Y13	Y13 output
	-	-	X26 input	X26	COM3	Common terminal 3
	-	-	X27 input	X27	Y14	Y14 output
	-	-	X30 input	X30	Y15	Y15 output
	-	-	X31 input	X31	Y16	Y16 output
	-	-	X32 input	X32	Y17	Y17 output
	-	-	X33 input	X33	COM4	Common terminal 4
	-	-	X34 input	X34	Y20	Y20 output
	-	-	X35 input	X35	Y21	Y21 output
	-	-	X36 input	X36	Y22	Y22 output
	-	-	X37 input	X37	Y23	Y23 output
	-	-	X40 input	X40	COM5	Common terminal 5
	-	-	X41 input	X41	Y24	Y24 output
	-	-	X42 input	X42	Y25	Y25 output
	-	-	X43 input	X43	Y26	Y26 output
	-	-	-	-	Y27	Y27 output

60-point TN and TP models

Take the Easy321-3624TN model as an example.

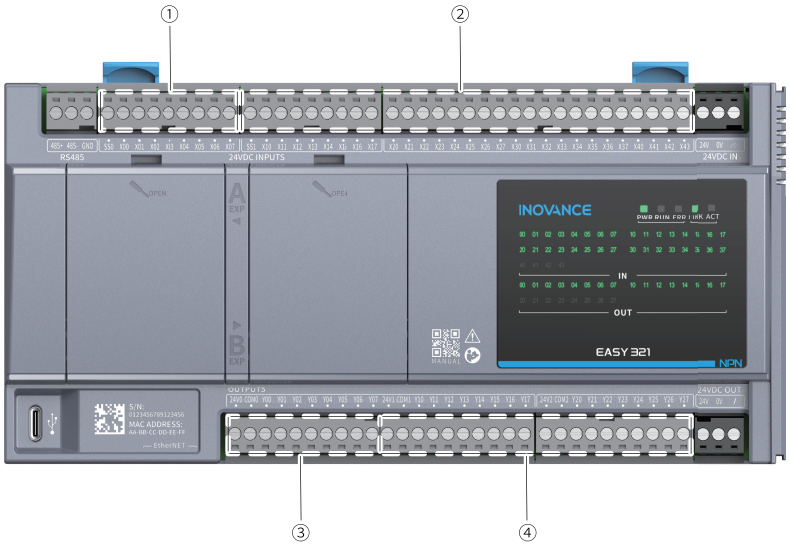

No.	①		②		③		④	
Terminal type	High-speed DI terminal		Regular DI terminal		High-speed DO terminal		Regular DO terminal	
Product model	Terminal signal	Silkscreen	Terminal signal	Silkscreen	Silkscreen	Terminal signal	Silkscreen	Terminal signal
Easy511-3624TN Easy321-3624TN Easy321-3624TP	High-speed input common terminal	SS0	Regular input common terminal	SS1	24V0	24 V input (+)	24V1	24 V input (+)
	X00 input	X00	X10 input	X10	COM0	24 V input (-)	COM1	24 V input (-)
	X01 input	X01	X11 input	X11	Y00	Y00 output	Y10	Y10 output
	X02 input	X02	X12 input	X12	Y01	Y01 output	Y11	Y11 output
	X03 input	X03	X13 input	X13	Y02	Y02 output	Y12	Y12 output
	X04 input	X04	X14 input	X14	Y03	Y03 output	Y13	Y13 output
	X05 input	X05	X15 input	X15	Y04	Y04 output	Y14	Y14 output
	X06 input	X06	X16 input	X16	Y05	Y05 output	Y15	Y15 output
	X07 input	X07	X17 input	X17	Y06	Y06 output	Y16	Y16 output
	-	-	X20 input	X20	Y07	Y07 output	Y17	Y17 output
	-	-	X21 input	X21	-	-	24V2	24 V input (+)
	-	-	X22 input	X22	-	-	COM2	24 V input (-)
	-	-	X23 input	X23	-	-	Y20	Y20 output
	-	-	X24 input	X24	-	-	Y21	Y21 output
	-	-	X25 input	X25	-	-	Y22	Y22 output
	-	-	X26 input	X26	-	-	Y23	Y23 output
	-	-	X27 input	X27	-	-	Y24	Y24 output
	-	-	X30 input	X30	-	-	Y25	Y25 output
	-	-	X31 input	X31	-	-	Y26	Y26 output
	-	-	X32 input	X32	-	-	Y27	Y27 output
	-	-	X33 input	X33	-	-	-	-
	-	-	X34 input	X34	-	-	-	-
	-	-	X35 input	X35	-	-	-	-
	-	-	X36 input	X36	-	-	-	-
Easy511-3624TN Easy321-3624TN Easy321-3624TP	-	-	X37 input	X37	-	-	-	-
	-	-	X40 input	X40	-	-	-	-
	-	-	X41 input	X41	-	-	-	-
	-	-	X42 input	X42	-	-	-	-
	-	-	X43 input	X43	-	-	-	-

4.3.4.2 Assignment of 40-point Model Terminals

40-point ER model

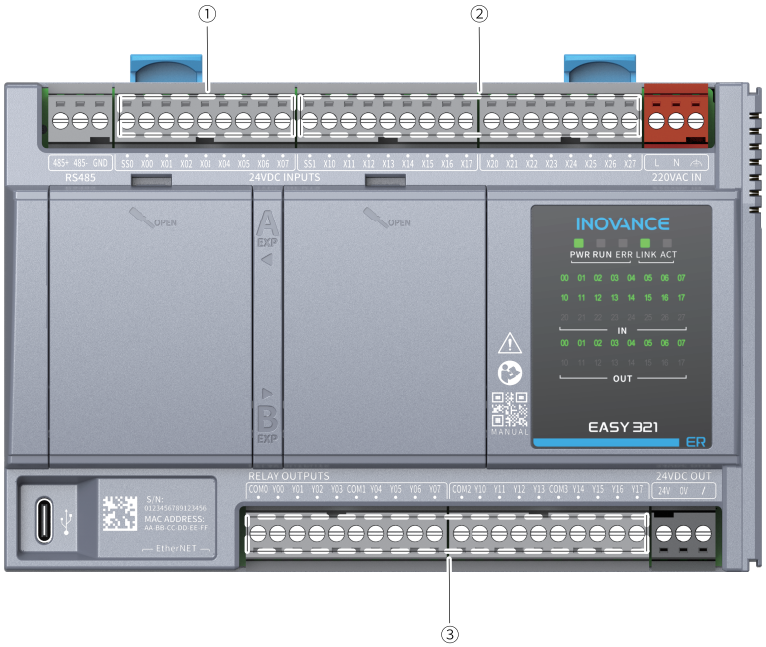

No.	①		②		③	
Terminal type	High-speed DI terminal		Regular DI terminal		Regular DO terminal	
Product model	Terminal signal	Silkscreen	Terminal signal	Silkscreen	Silkscreen	Terminal signal
Easy321-2416ER	High-speed input common terminal	SS0	Regular input common terminal	SS1	COM0	Common terminal
	X00 input	X00	X10 input	X10	Y00	Y00 output
	X01 input	X01	X11 input	X11	Y01	Y01 output
	X02 input	X02	X12 input	X12	Y02	Y02 output
	X03 input	X03	X13 input	X13	Y03	Y03 output
	X04 input	X04	X14 input	X14	COM1	Common terminal
	X05 input	X05	X15 input	X15	Y04	Y04 output
	X06 input	X06	X16 input	X16	Y05	Y05 output
	X07 input	X07	X17 input	X17	Y06	Y06 output
	-	-	X20 input	X20	Y07	Y07 output
	-	-	X21 input	X21	COM2	Common terminal
	-	-	X22 input	X22	Y10	Y10 output
	-	-	X23 input	X23	Y11	Y11 output
	-	-	X24 input	X24	Y12	Y12 output
	-	-	X25 input	X25	Y13	Y13 output
	-	-	X26 input	X26	COM3	Common terminal
	-	-	X27 input	X27	Y14	Y14 output
	-	-	-	-	Y15	Y15 output
	-	-	-	-	Y16	Y16 output
	-	-	-	-	Y17	Y17 output

40-point TN and TP models

Take the Easy321-2416TN model as an example.

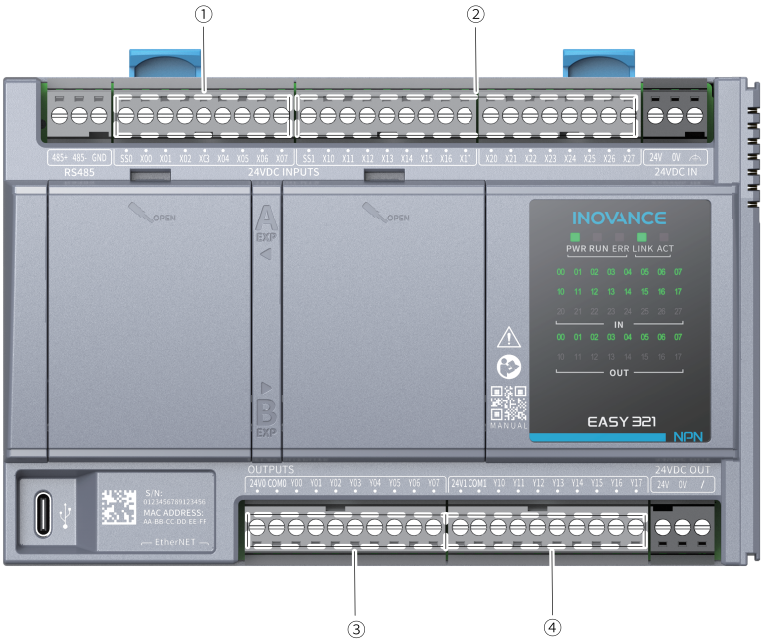

No.	①		②		③		④	
Terminal type	High-speed DI terminal		Regular DI terminal		High-speed DO terminal		Regular DO terminal	
Product model	Terminal signal	Silk screen	Terminal signal	Silk screen	Silk screen	Terminal signal	Silk screen	Terminal signal
Easy321-2416TN Easy321-2416TP Easy511-2416TN	High-speed input common terminal	SS0	Regular input common terminal	SS1	24V0	24 V input (+)	24V1	24 V input (+)
	X00 input	X00	X10 input	X10	COM0	24 V input (-)	COM1	24 V input (-)
	X01 input	X01	X11 input	X11	Y00	Y00 output	Y10	Y10 output
	X02 input	X02	X12 input	X12	Y01	Y01 output	Y11	Y11 output
	X03 input	X03	X13 input	X13	Y02	Y02 output	Y12	Y12 output
	X04 input	X04	X14 input	X14	Y03	Y03 output	Y13	Y13 output
	X05 input	X05	X15 input	X15	Y04	Y04 output	Y14	Y14 output
	X06 input	X06	X16 input	X16	Y05	Y05 output	Y15	Y15 output
	X07 input	X07	X17 input	X17	Y06	Y06 output	Y16	Y16 output
	-	-	X20 input	X20	Y07	Y07 output	Y17	Y17 output
	-	-	X21 input	X21	-	-	-	-
	-	-	X22 input	X22	-	-	-	-
	-	-	X23 input	X23	-	-	-	-
	-	-	X24 input	X24	-	-	-	-
	-	-	X25 input	X25	-	-	-	-
	-	-	X26 input	X26	-	-	-	-
	-	-	X27 input	X27	-	-	-	-

4.3.5 Terminal Wiring

Wiring block diagram of terminal input

- For the wiring block diagram of relay input, see that for the sink input and source input.
- Sink input

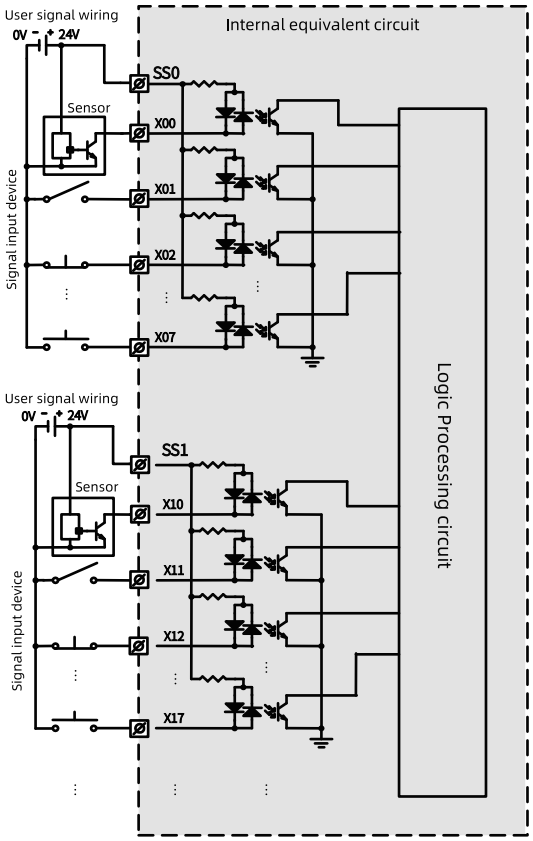

- Source input

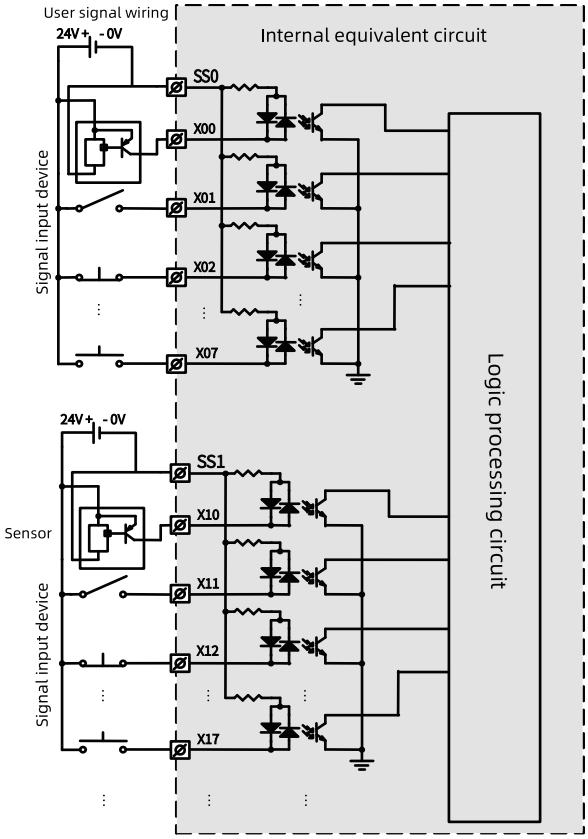

Wiring block diagram for terminal output

- Relay

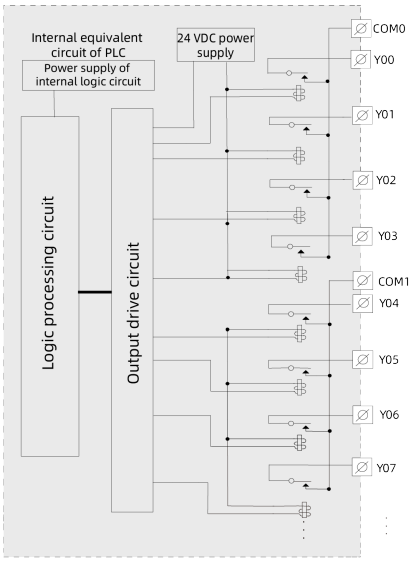

- Sink

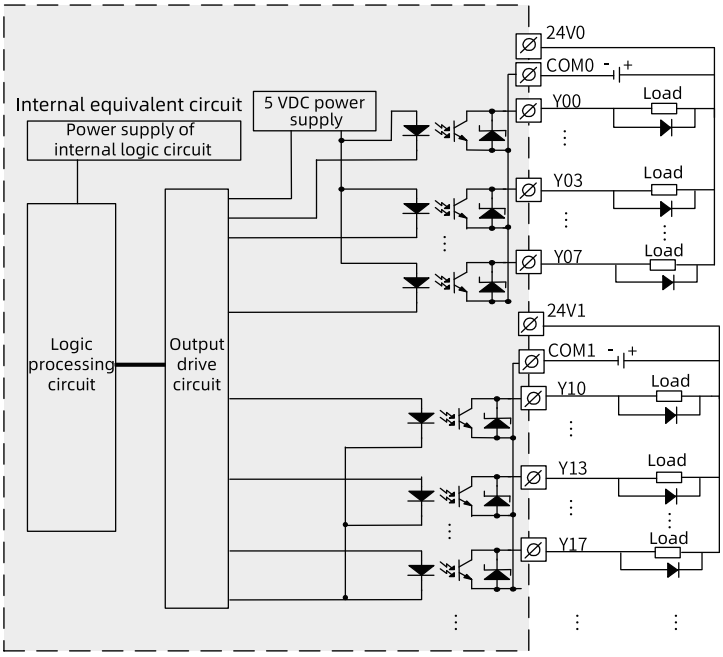

- Source

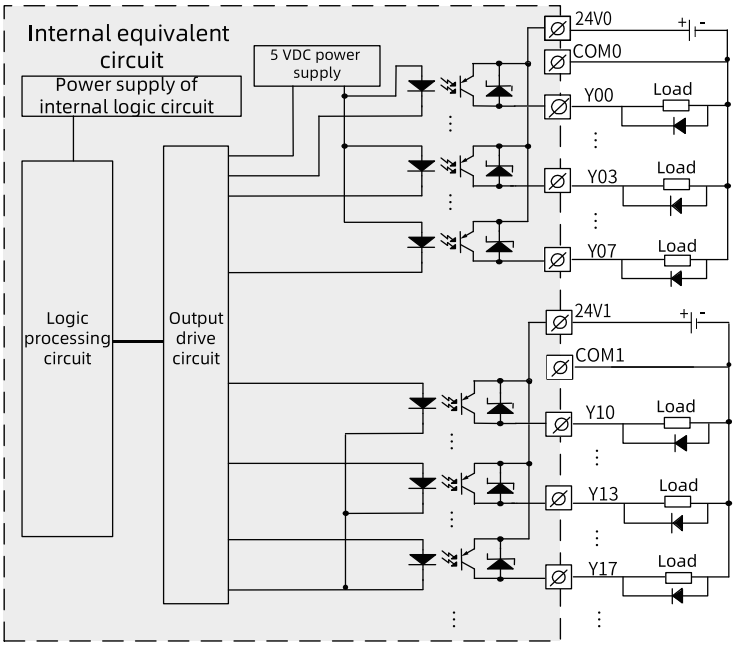

- Electric shock protection for use of inductive load
  The PLC is not equipped with an internal protection circuit for relays. Therefore, when an inductive load is used, a large back EMF can be generated between contacts at stop, which can lead to arc discharge that causes contact failure or contact pitting, shortening the service life of the contacts. It is recommended to use loads with built-in protection circuit.

  For loads without built-in relay protection circuit, you can use an external electric shock protection circuit to reduce noise and prolong the service life.

  - Relay DC circuit
    Connect a freewheeling diode in parallel with the load upon DC circuit. The freewheeling diode must satisfy the following requirements: ① reverse voltage: 5 to 10 x load voltage; ② forward current > load current.

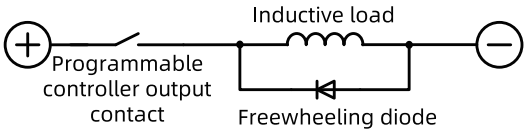

  - Relay AC Circuit
    Connect a surge protection device in parallel with the load. The surge protection device must meet the following requirements: ① The rated voltage is applicable to all kinds of outputs; ② The electrostatic capacity is about 0.1 μF; ③ The resistance is about 100 Ω to 200 Ω.

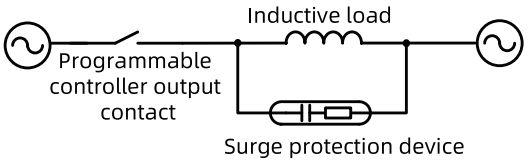

- Electric shock protection when using capacitive load

When a capacitive load is applied, an impulse current, 20 to 40 x regular current, can occur in the case of electric shock. Note that the impulse current cannot exceed the current generated upon the maximum resistive load.

For electronic circuit loads such as AC drives, capacitive loads may exist as the AC drive contains capacitors.

Input/Output wiring diagram

The following takes 60-point ER/TN/TP models as an example, which is similar to the 40-point ER/TN/TP models.

- Relay output

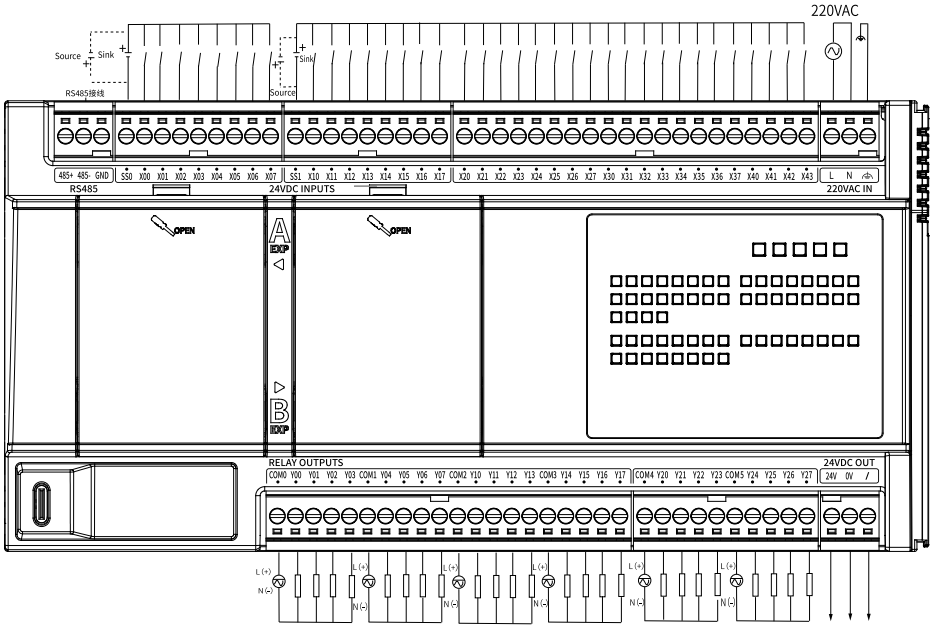

- Sink output

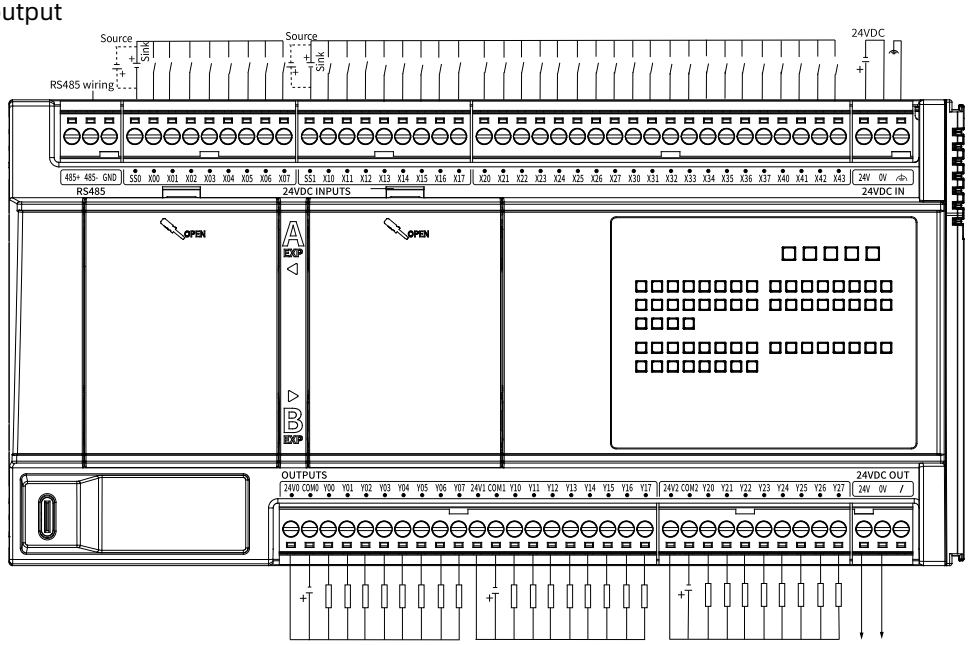

- Source output

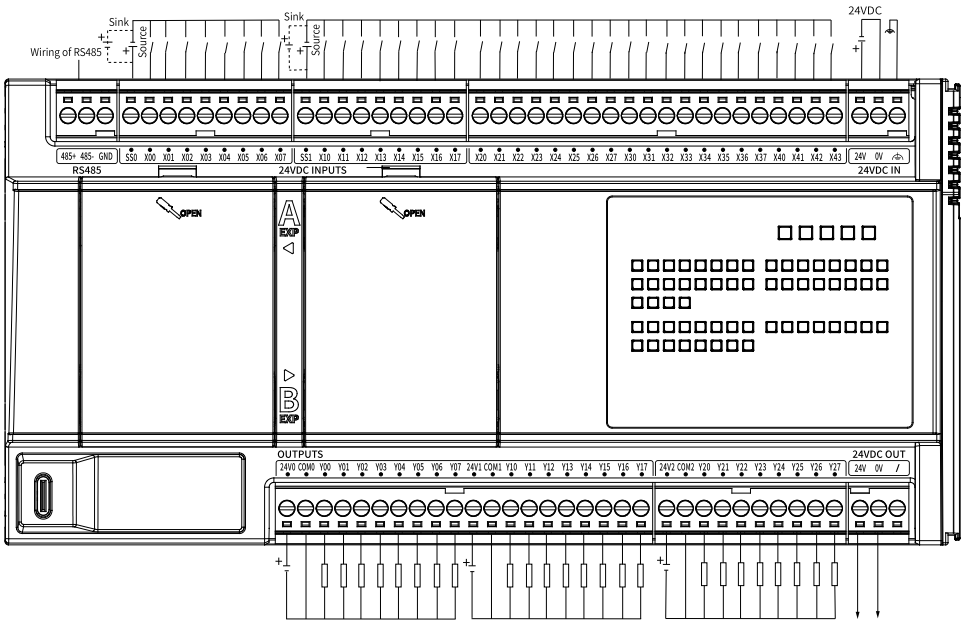

4.3.6 Connecting/Disconnecting Cables

Connecting cables

1. Insert the cable into the terminal.
2. Tighten the screws with a slotted screwdriver to secure the cables, as shown below.

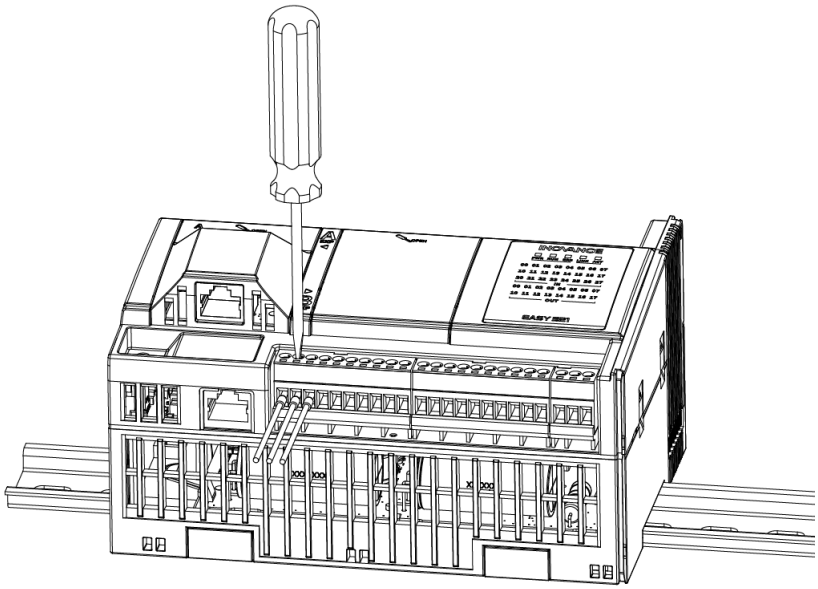

Disconnecting cables

Loosen the terminal screws with a slotted screwdriver and pull out the cable.

4.4 Connecting RS485 Cables

4.4.1 Wiring Preparation

For details, see *"4.3.1 Wiring Precautions" on page 50*.

4.4.2 Terminal Assignment

Terminal type	Model	Network silkscreen name	Description
RS485 terminal	ER, TN, and TP	485+	RS485 communication signal +
		485-	RS485 communication signal -
		GND [1]	485 GND

Caution

[1] Do not connect a grounding cable to GND.

4.4.3 Terminal Wiring

The following figure shows the RS485 bus connection topology. Note the following when connecting the RS485 bus.

- It is recommended to use shielded twisted pair cables for connecting the RS485 bus. Connect 485 + and 485- with twisted pairs [1].
- To prevent signal reflection, connect a 120 Ω termination resistor[2] at each end of the bus.
- Connect the reference grounds of 485 signals of all the nodes together.
- A maximum of 31 nodes can be connected, and the distance between the node branches must be shorter than 3 m.

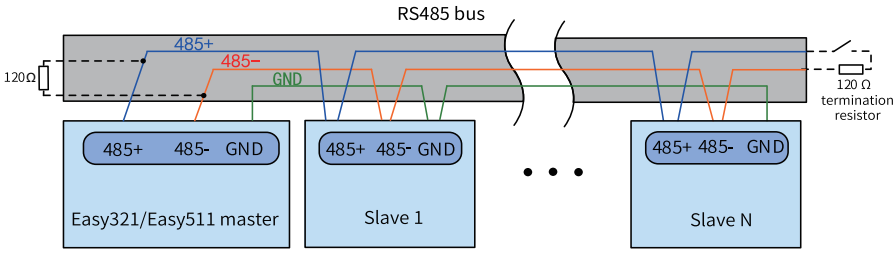

Note

[1] Add crimping terminals to prevent possible short circuit of adjacent pins during terminal wiring.

[2] The Easy series PLC is not equipped with a termination resistor. You can connect an external termination resistor as needed. The GE21-CAN-485 expansion card is equipped with a termination resistor, which can be controlled through a DIP switch. This DIP switch is set to ON (termination resistor applied) by default.

4.4.4 Connecting/Disconnecting Cables

For details, see *"4.3.6 Connecting/Disconnecting Cables" on page 63*.

4.5 Connecting the USB Cable

4.5.1 Wiring Preparation

Prepare an USB cable and a PC.

4.5.2 Connecting/Disconnecting Cables

Connecting cables

Connect one end of the USB cable to the Type-C terminal of the PLC and the other end to the PC.

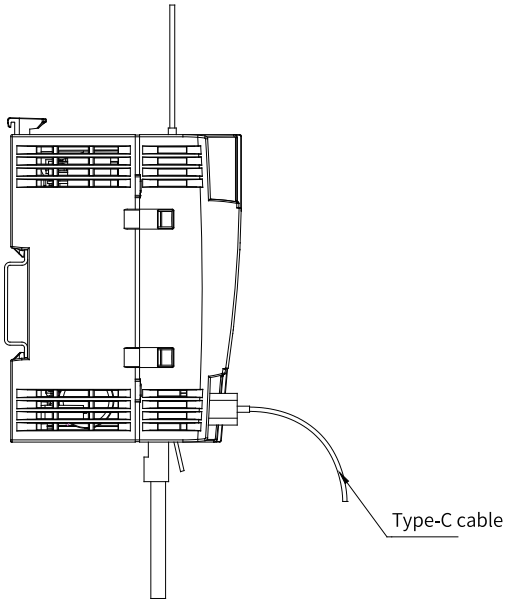

Note

To remove the cable, pull out the USB cable directly.

5 Configuration and Commissioning

5.1 Configuration

The following takes configuration of Easy511-3624TN+GL20-RTU-ECT32+GL20-1600END+GL20-0016ETN as an example to present configuration and commissioning of Easy511 series PLC.

Prerequisites

- The hardware installation and wiring in the configuration example is done.
- All the devices in the configuration example are powered on and started.
- The PC with the AutoShop programming software is connected to Easy511 series PLC through an USB cable.

Operation procedure

1. Create a project.

   a. Double-click the AutoShop shortcut icon on the PC desktop to open the AutoShop programming software.

   b. Select "File > New Project" in the menu bar to open the "New Project" dialog box, as shown below.

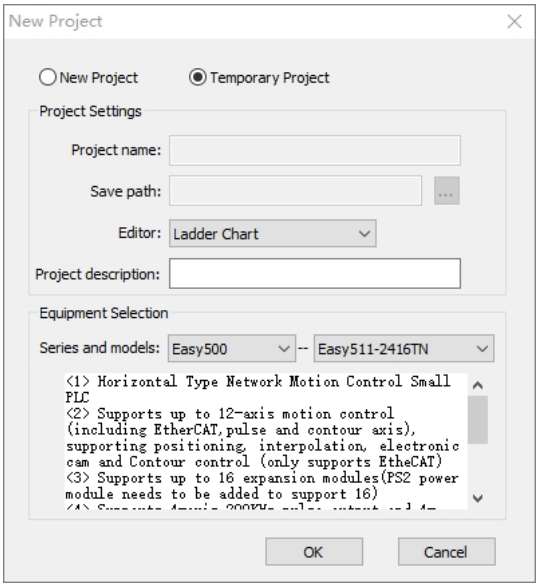

   c. Set the project name, project path, programming language, and project description. Select "Easy500 - Easy511-3624TN" in "Series and Model", and click "OK" to enter the Easy511-3624TN project interface.

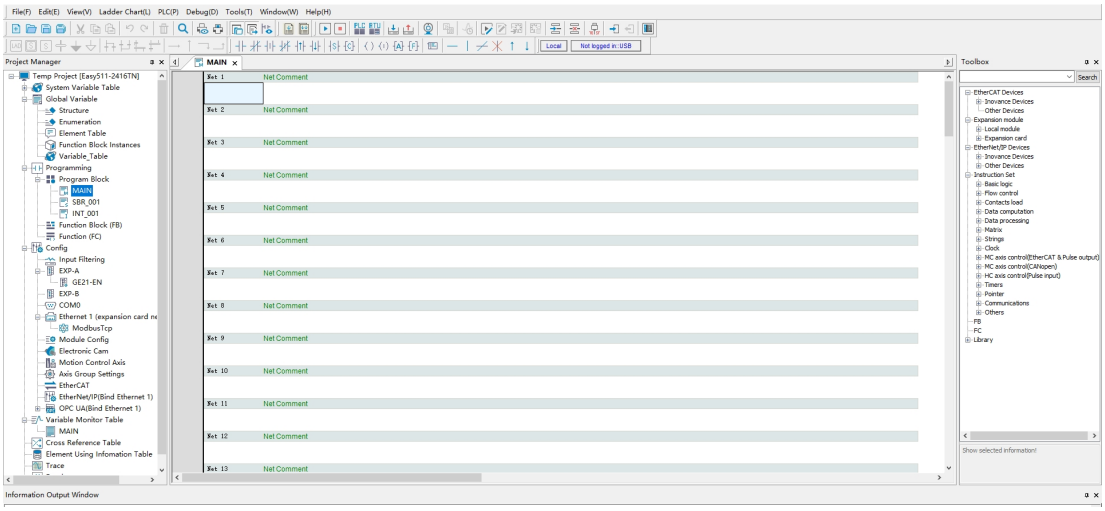

2. Add a coupler.

   Select "EtherCAT Devices > Inovance Devices > I/O coupler" on the "Toolbox" interface, and double-click "GL20-RTU-ECT32". In the project management tree, generate a "GL20-RTU-ECT32" slave node under the "EtherCAT" node, and open the configuration interface as shown below.

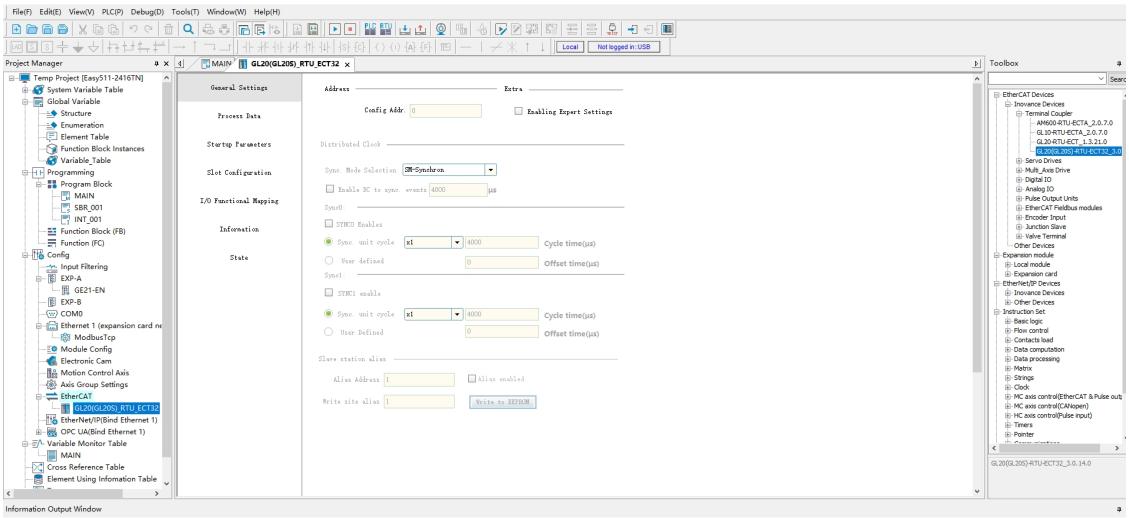

3. Add an expansion module.

   - Method 1: Adding manually

     a. Click "Slot Configuration" to enter the corresponding interface.

     b. Select the module on the right side of the interface, click "Add/Change" to add the GL20 series expansion module. GL20-1600END and GL20-0016ETN modules are taken as example.

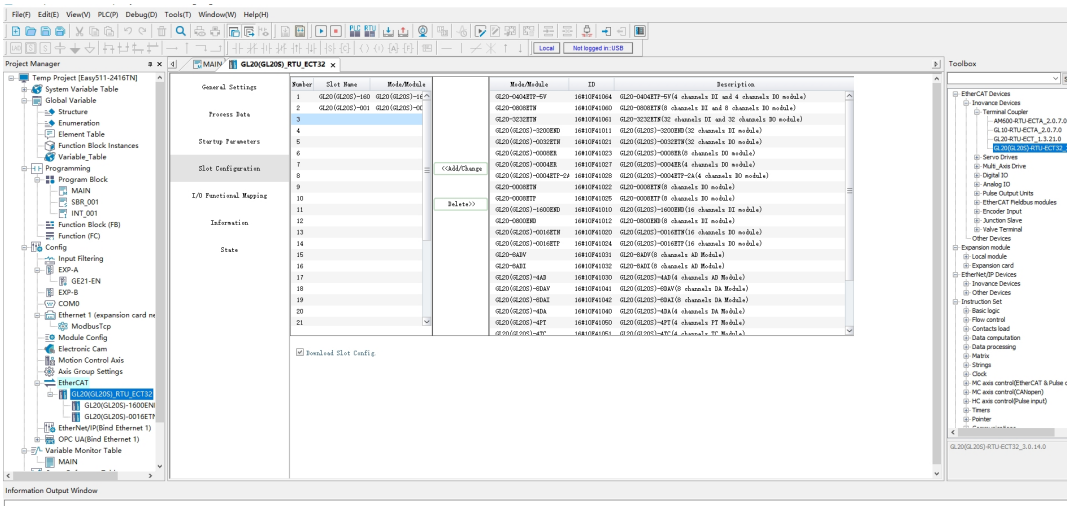

Note

- When the sum of the power consumption of the module added exceeds the maximum power consumption, a pop-up prompt can be displayed.
- To delete a module, select the module on the left side of the interface and click "Delete".

- Method 2: Scanning automatically

  a. Right-click "EtherCAT" in the project management tree and select "Auto Scan".

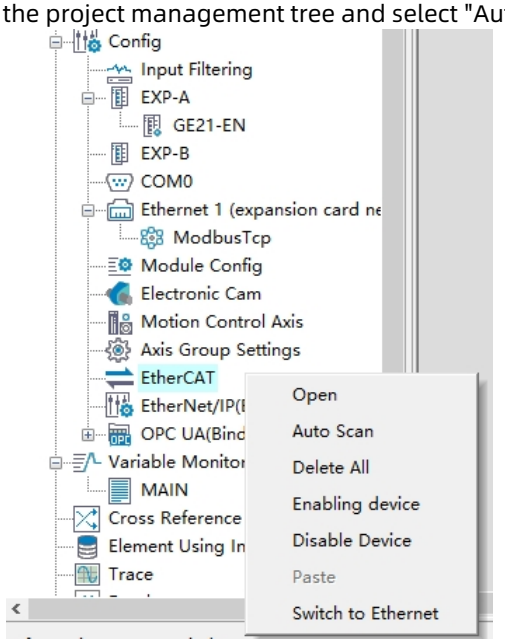

  b. Click "Start Scan" in the dialog box that opens to display GL20 series expansion modules actually mounted.

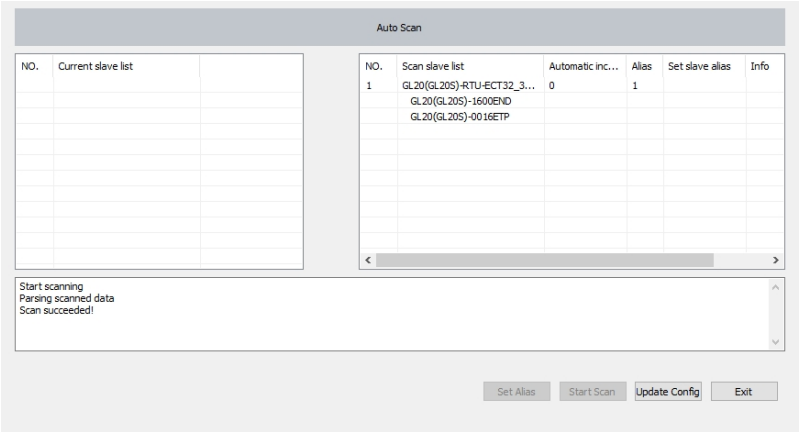

Note

When the total power consumption of the scanned modules exceeds the maximum power consumption, the configuration can be updated normally, but an alarm message can be displayed during compilation.

c. Click "Update Config". The EtherCAT configuration in the project management window is shown in the following figure.

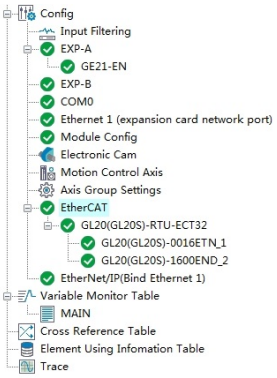

4. Configure the module.

Double-click the module node in the project management tree under "EtherCAT>GL20-RTU-ECT32" in sequence to open the configuration interface of the corresponding module and configure the module parameters. The module parameters are described in the following table.

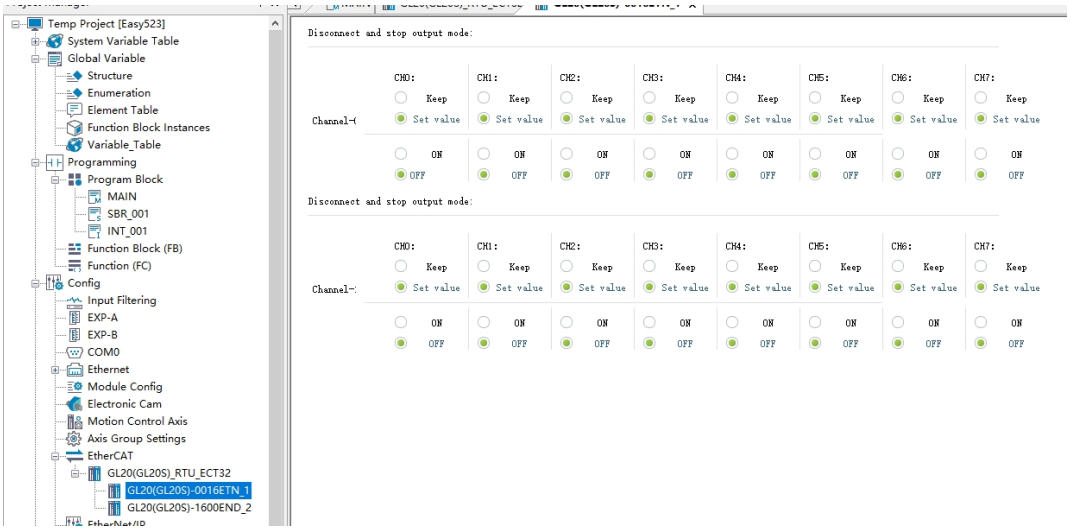

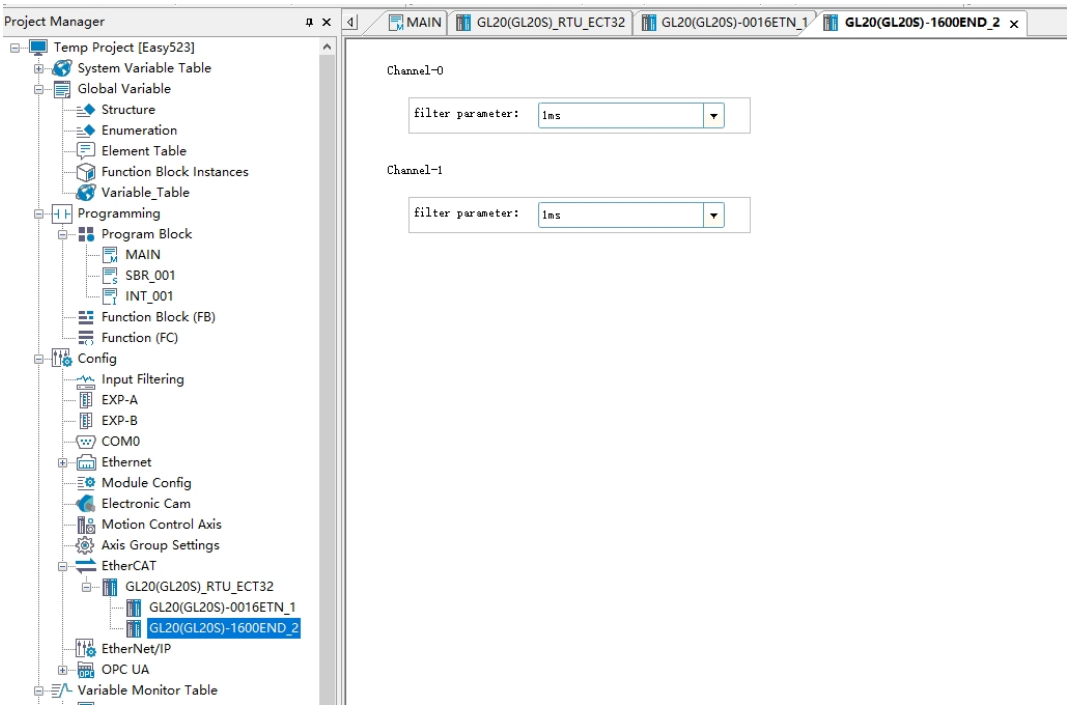

Module	Name		Description	Setting
GL20-1600END	Filter parameter		Input filter time	Drop-down options: No filter, 0.25 ms, 0.5 ms, 1 ms.2 ms, 4 ms, 8 ms, 16 ms, 32 ms, 64 ms, 128 ms Default: 1 ms
GL20-0016ETN	Network cut-off/Output stop mode	Retained/Settings	Retained: Keep present output status Settings: Output according to preset value	Click the radio button before "Retained"/"Settings".
		ON/OFF	Output preset value: • ON: Output 1 • OFF: Output 0	Click the radio box in the front of "ON"/"OFF".

5. Download, run, and stop the program.

   a. Click the download button in the toolbar to download the program to the PLC.
   b. After download, click the operation button in the toolbar to run the program.

6. Click the monitor button in the toolbar. Green icons are displayed in front of the EtherCAT node and GL20-RTU-ECT32 node. The "Current status of PLC" indicator and "Failure status" indicator at the bottom of the AutoShop interface are displayed in green, indicating that no error is reported by the PLC, which means the GL20-RTU-ECT32 communication interface module is operating properly.

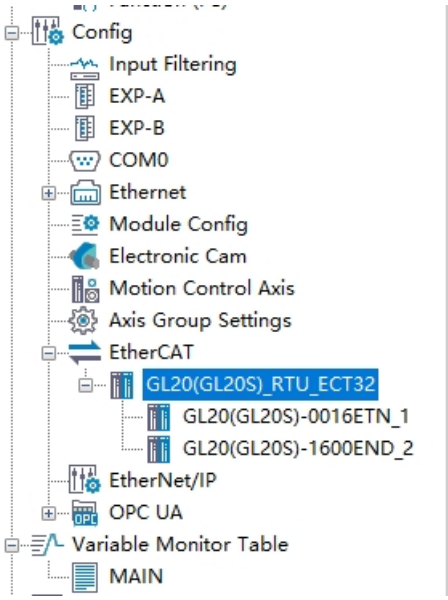

5.2 Commissioning

After the Easy series PLC is configured with the remote I/O, you need to perform simple commissioning on the remote I/O functions to ensure that the PLC, EtherCAT coupler, and GL20 expansion module operate properly. In this section, the delay time for "Output > Input" is tested by taking the two terminals of remote I/O as an example.

Prerequisites

After I/O wiring is done, connect the 00 terminal output of GL20-0016ETN to the 00 terminal input of GL20-1600END.

Operation procedure

1. Perform I/O mapping.

   a. Double-click the "Config > EtherCAT > GL20-RTU-ECT32" in the project tree to open the configuration interface of the EtherCAT coupler. Click "I/O Functional Mapping" in the configuration interface. You can see GL20-0016ETN and GL20-1600END expansion modules that added in *"5.1 Configuration" on page 66* in the "Channel" bar, as shown below.

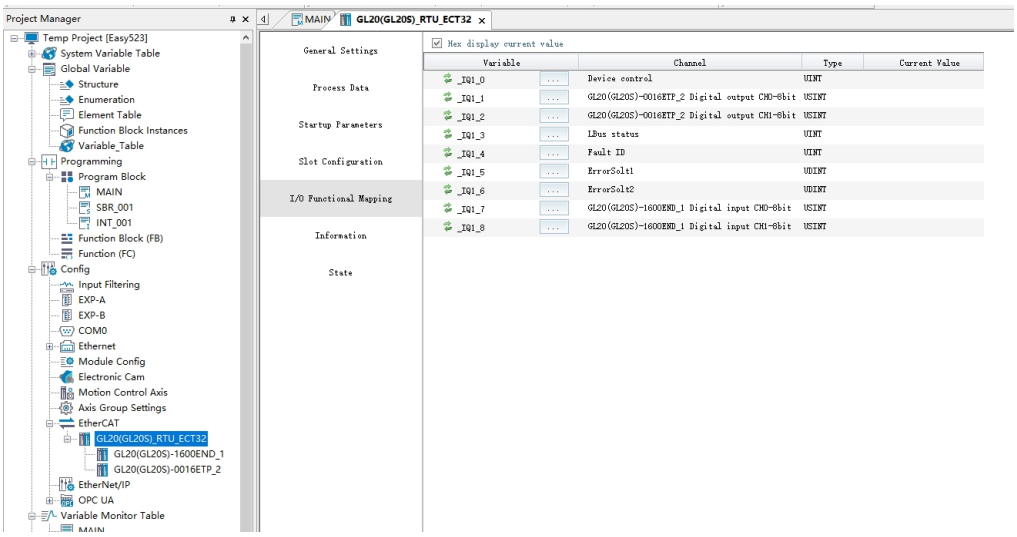

b. The remote I/O terminal mapping consists of 8 bits as a group to form a channel. Double-click the icon ... in "GL20-0016ETN_1 Digital output CH0-8bit" channel. Open the "Variable Input Assistant" window, click "SoftElement > WordElement > D(0-7999)", and select the D0 soft component. Click "OK" to done the 8-bit mapping of channel 0.

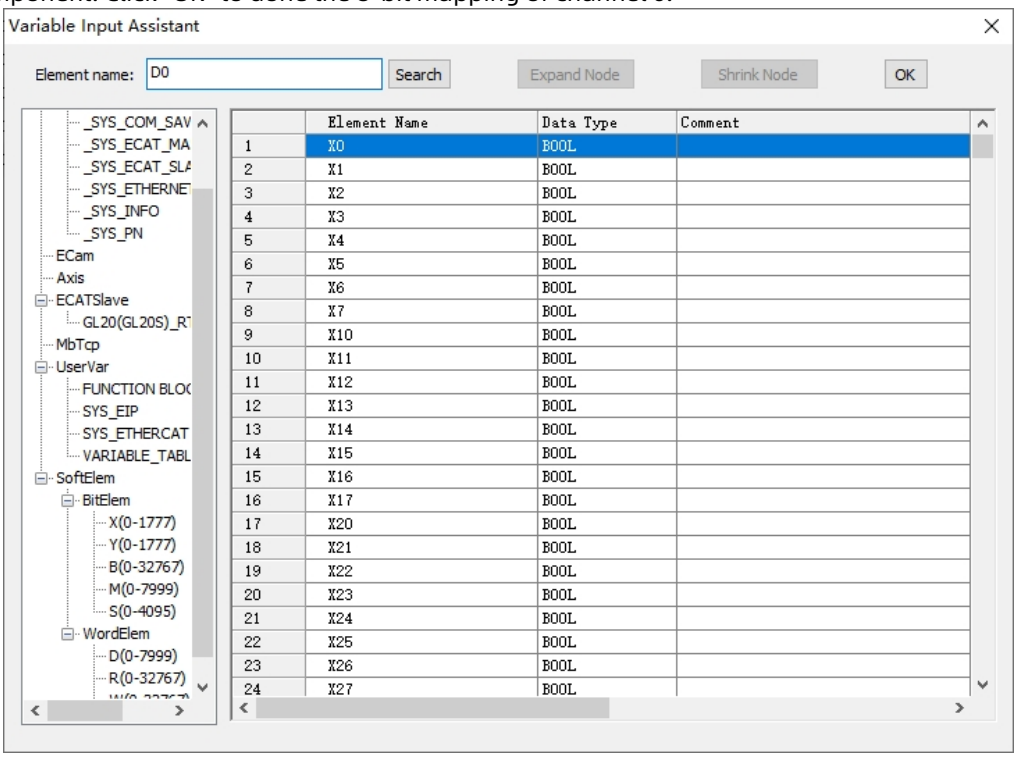

Map input channel 0 to D2 soft component in the same procedure. The following figure shows the interface after mapping is done.

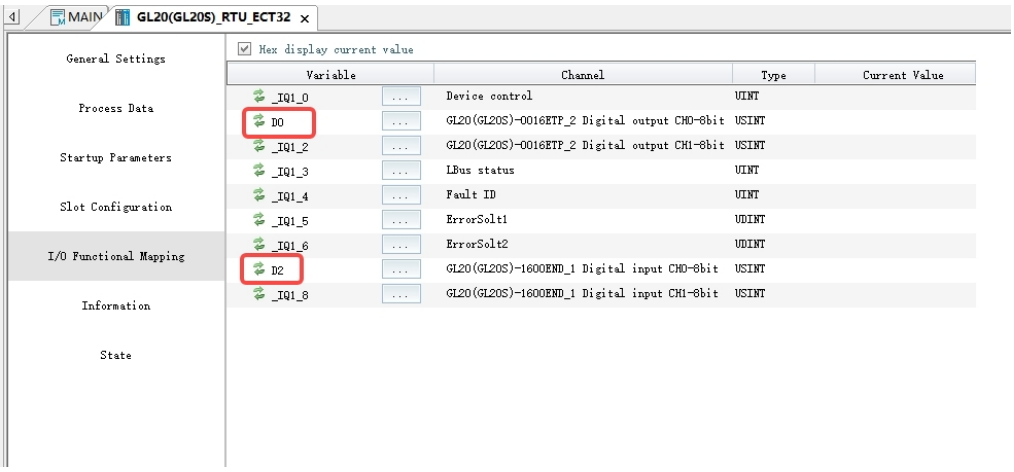

2. Write a test program.

   The following figure takes ladder diagram programming in the MAIN program block as an example.

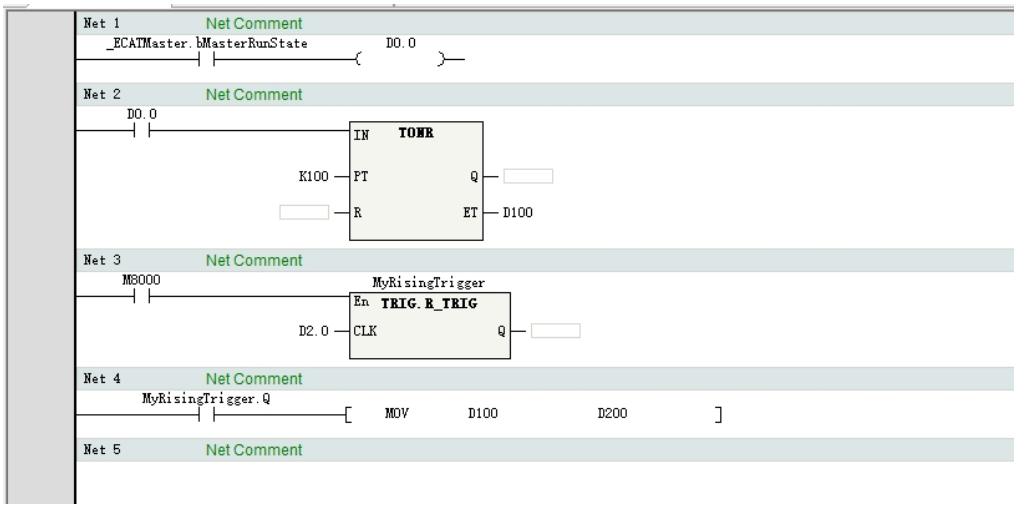

- Network 1

  "_ECATMaster" is a predefined system structure variable, which can be viewed by double-clicking "System Variable Table > _SYS_ECAT_MASTER" in the project management tree. Click the "_ECATMaster" variable name in the system variable table "_SYS_ECAT_MASTER" to view the details of the structure variable in the "Toolbox" window on the right side of the interface, as shown in the following figure. The member "bMasterRunState" indicates whether EtherCAT has been initialized.

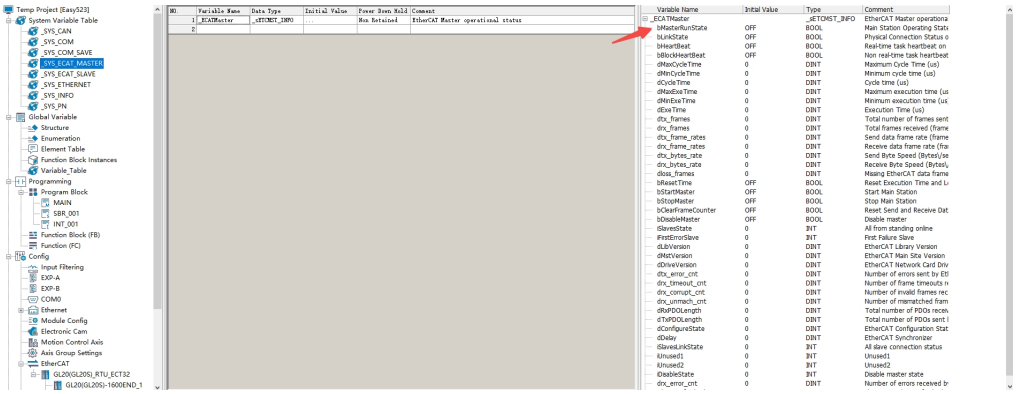

Note

- The remote I/O in this example is based on EtherCAT. Therefore, EtherCAT initialization must be done before output.
- D0.0 indicates the lowest bit of the word soft component of D0. In step 1 "I/O mapping", the low 8 bits of D0 are bound to the first 8 channels of the remote output terminal. Therefore, setting D0.0 is equivalent to generating output from terminal 00 of GL20-0016ETN.

- Network 2
  When D0.0 generates output, start a TONR switch-on delay timer for timing. Note that only the timing function is used here, and the "delayed switch-on" feature is not used. The TONR.PT is set to 1000 ms only to prevent the timing from ending before the purpose of this example is achieved. TONR.ET indicates the time elapsed from the moment when TONR.IN is set to the moment when the time is counted to TONR.PT. For details on the use of the TONR instruction, see *H5U&Easy Series Programmable Logic Controller Instruction Guide*.

- Network 3
  The GL20-1600END terminal 00 that bound to D2.0 is the input in this example. When D2.0 receives the D0.0 signal, a rising edge is generated to trigger the MyRisingTrigger.CLK pin, which in turn sets the MyRisingTrigger.Q pin to a main task scan cycle.

- Network 4
  Save the time in network 2 TONR.ET to D200 during the current scan cycle that set by the MyRisingTrigger.Q pin. After power-on, the value saved in D200 is the delay time of the remote I/O "Output > Input" in this example.

3. View the results.
   To get consistent results, set the main task scan cycle to 1 ms and the EtherCAT scan cycle to 1 ms.

   a. Set the main task scan cycle.
      Right-click "Program Block" and click "Block Properties".

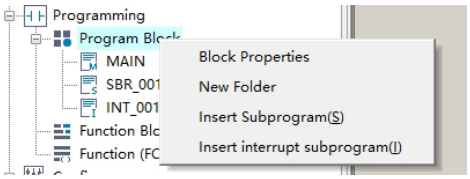

      In the dialog box that opens, check "Constant scan period" and fill in a value of 1 ms.

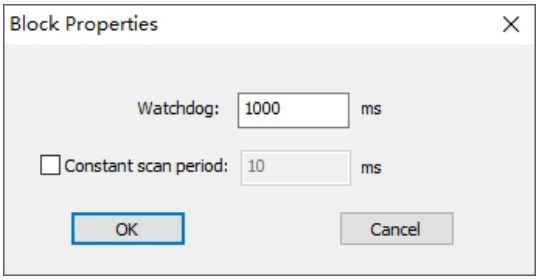

   b. Set the EtherCAT scan cycle.

      1). Double-click "Config > EtherCAT" to open the EtherCAT configuration interface. Set the Cycle time option in "General Settings > Distributed clock" to 1000 μs.

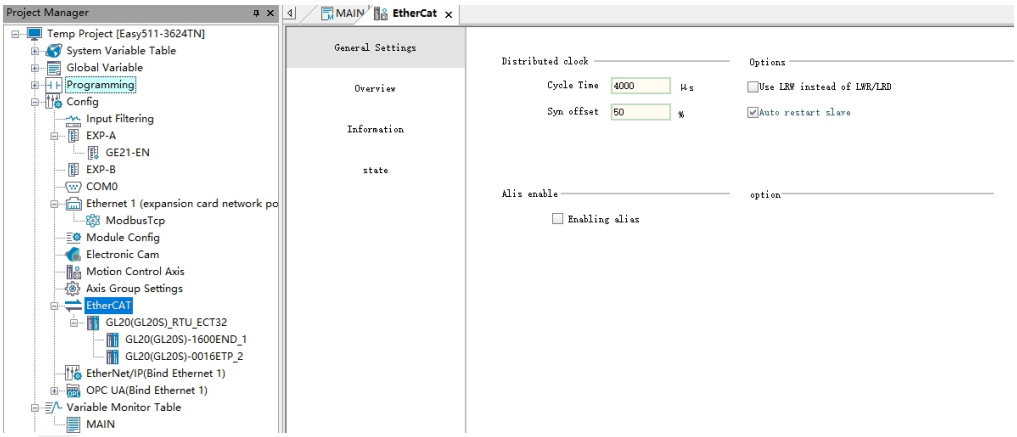

2). Click on the toolbar to download the program and configuration to the PLC.

3). Click on the toolbar to monitor the PLC and view the results in the MAIN, as shown in the following figure.

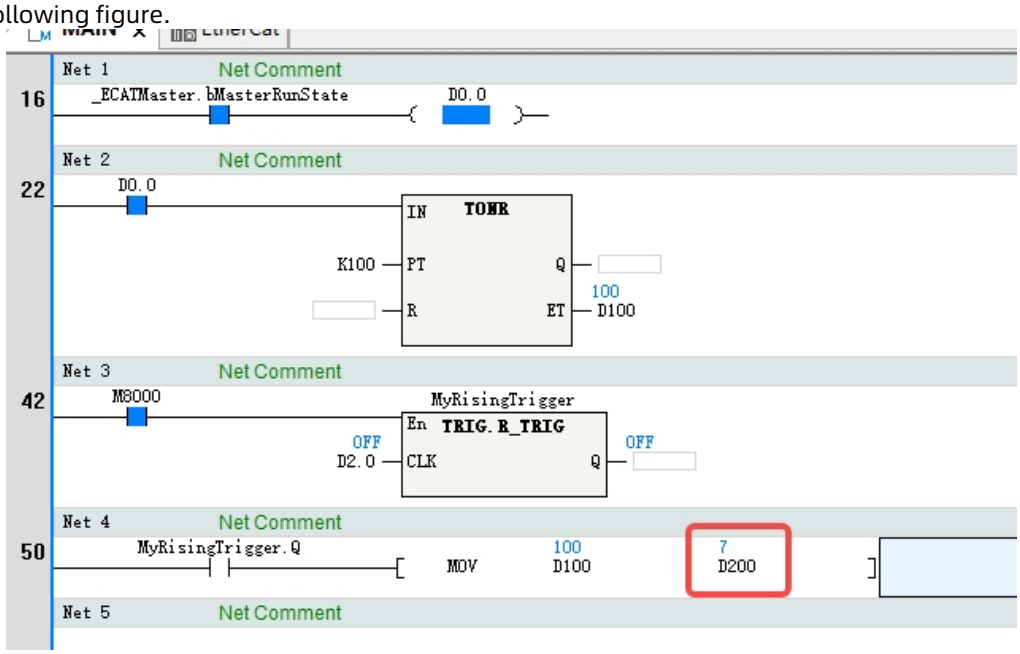

Caution

This result is for reference only, which varies with programs and firmware versions. For detailed I/O refresh performance, see *H5U&Easy Series Programmable Logic Controller Programming Guide*.

6 Product Functions

6.1 PN Coupler Mode

Function description

The GE21-RTU expansion card allows you to quickly configure the PLC as a PN coupler. The expansion card can be used to back up the configuration information of the PLC that used as a PN coupler. After replacing the PLC, the parameters are automatically downloaded for direct operation, allowing software-free maintenance.

Models supported

The GE21-RTU expansion card supports all Easy321 models.

PN coupler mode switchover

For detailed configuration of PN coupler mode, see section Configuration and Commissioning in *GE21-RTU Coupler Configuration Card User Guide*.

Caution

- The GE21-RTU expansion card only supports EXP-B card slot.
- The type ID of the GE21-RTU expansion card is 18. The configured expansion card type must be consistent with the type of the expansion card installed.

- **Switching to PN coupler mode with GE21-RTU expansion card**
  - Group S2: 1
    - DIP switch 0: Allows the expansion card to upload backup data to the PLC.
    - DIP switch 1: Allows backup data to be downloaded from PLC to the expansion card.
  - Groups S2: 2 to 4
    - DIP switch 010: Indicates the PN coupler mode.
    - Other DIP switches: Indicate the PLC mode.
  - Other DIP switches are not enabled.
- **Switching to PN coupler mode with AutoShop**

  Operation procedure

  1. Create a new project in AutoShop, click the RTU button in the toolbar, and click "Yes" in the pop-up window.

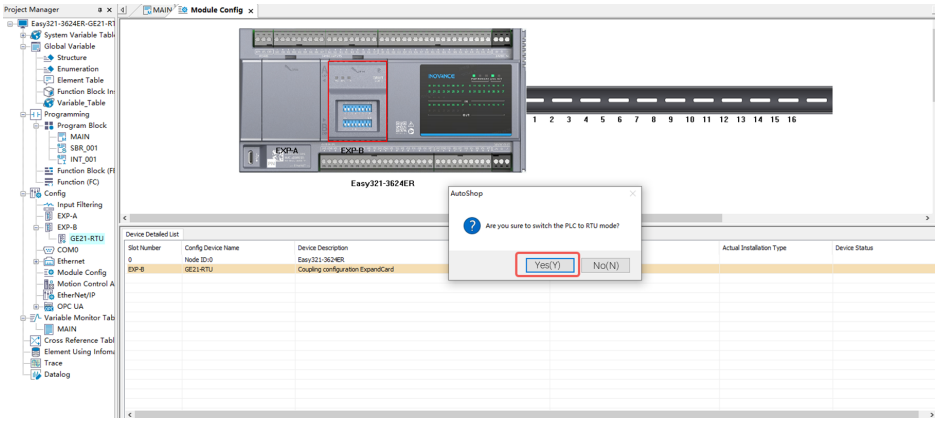

2. A window that indicates setting is done successfully pops out. Click "OK" in this window to allow the coupler mode to be activated at next power-on.

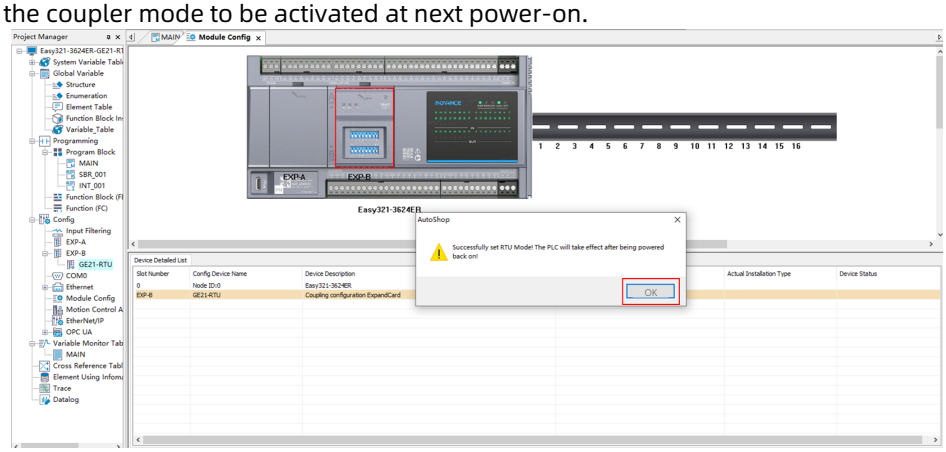

3. The current mode is coupler mode.

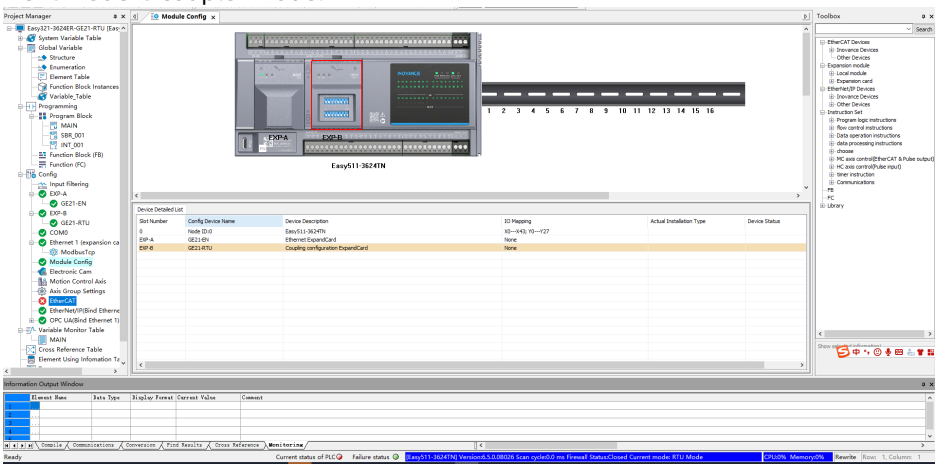

- **Reserving PLC function in the PN coupler mode**

  When switching to the coupler mode, the PLC cannot enter the operational state and only the following PLC functions are supported.

  - Firmware upgrade: The operation mode does not change upon firmware upgrade/downgrade. For SD cards and IMG, the PLC mode applies upon firmware upgrade.
  - Project upload/download: After the project is downloaded, the PLC cannot run and the software tool indicates "Operation cannot be switched in the coupler mode".
  - Online monitoring: Only I/O status can be monitored. The PLC program cannot run or be modified online.

- Modifying the network port IP: The IP is activated immediately after modification.

6.2 Dual Network Ports

Function description

The PLC carries a built-in EtherCAT port. The GE21-EN expansion card provides an additional network port.

- The built-in Ethernet port supports one EtherCAT channel, which can be switched to Ethernet protocol.
  - The local network port of Easy511 series PLC is EtherCAT by default, as shown in the figure.

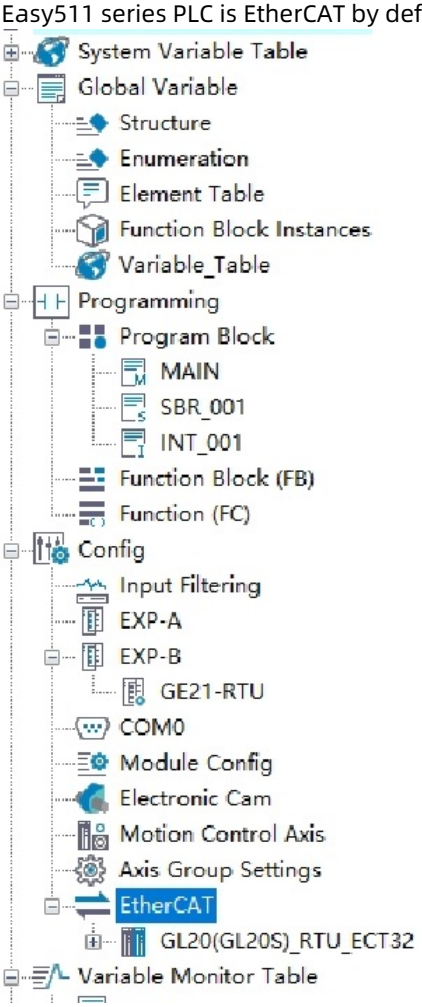

  - When the local network port is Ethernet, you can switch to the EtherCAT mode by right-clicking "Project > Ethernet 0 > Switch to EtherCAT".

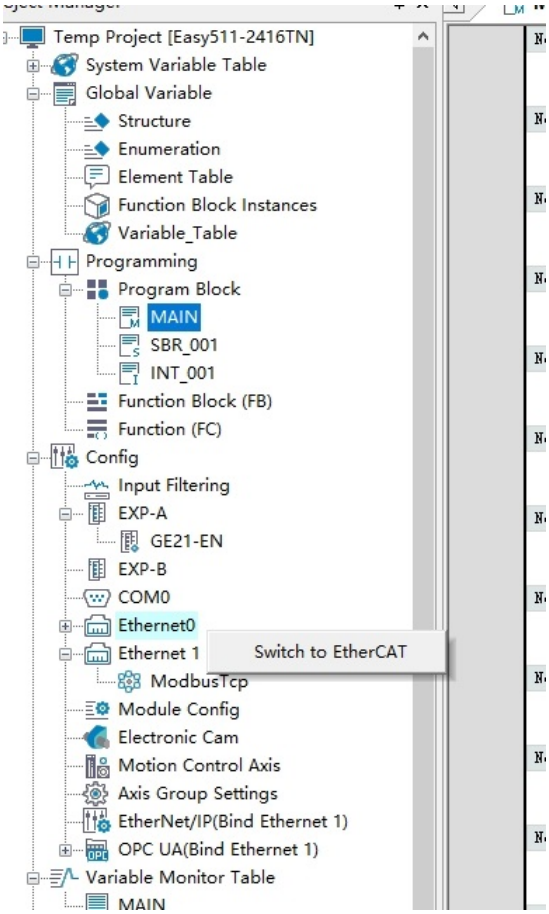

- The built-in GE21-EN expansion card provides one expansion network port to support functions including Ethernet-based monitoring, program upload/download, Socket, Modbus-TCP, and EIP.

Models supported

The Easy511 series PLC is equipped with a GE21-EN Ethernet card as standard.

6.3 Expansion of Local I/O Points

Function description

The Easy 321 and Easy511 series PLCs have relay output models.

- **Short circuit protection function for transistor model**
  Each of the eight output terminals form a group that shares short circuit protection. Take Y10 to Y17 as an example. If Y12 is short-circuited, the short circuit protection is triggered and Y12 cannot be operated. You can view the short circuit alarm with fault code 5302 through the software tool. After the short circuit fault is cleared, power on the 24 V external power supply next to terminals Y10 to Y17 again to restore the function of Y12.

- **Output action counting function for relay model**
  You can record the number of actions during the lifetime of the relay model. Double-click "System Variable Table > _SYS_INFO" in the project management tree, and click "_RelayCntDisp" to view the member variables in the tool box on the right, as shown in the following figure.

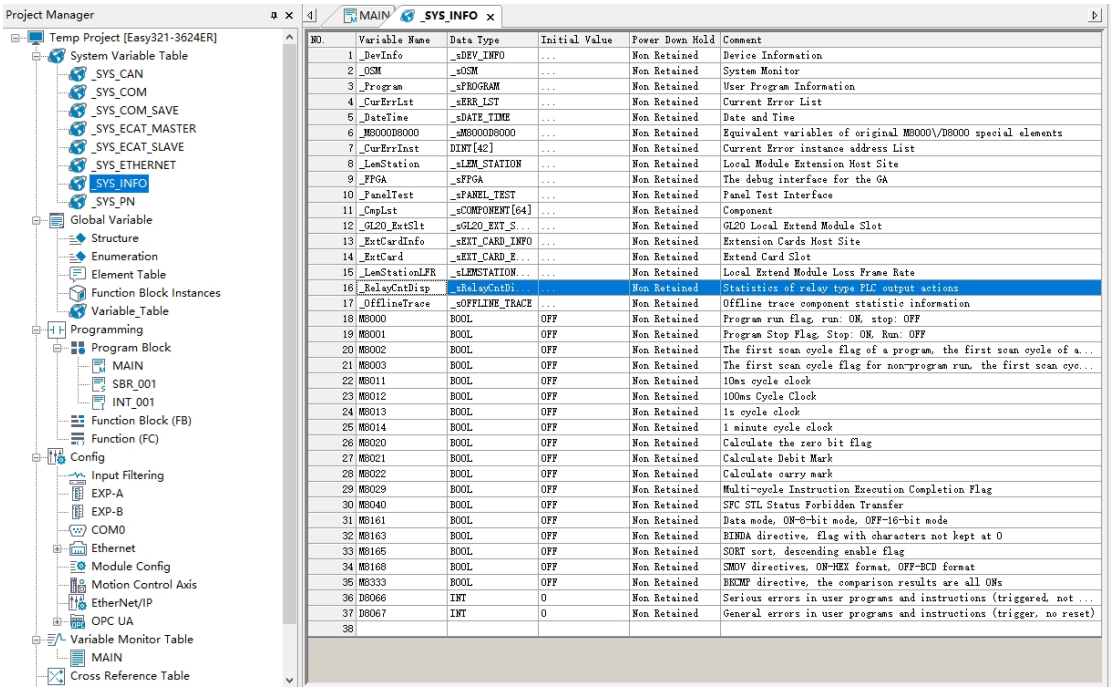

NO.	Variable Name	Data Type	Initial Value	Power Down Hold	Comment
1	_DevInfo	_sDEV_INFO	...	Non Retained	Device Information
2	_OSM	_sOSM	...	Non Retained	System Monitor
3	_Program	_sPROGRAM	...	Non Retained	User Program Information
4	_CurErrLst	_sERR_LST	...	Non Retained	Current Error List
5	_DateTime	_sDATE_TIME	...	Non Retained	Date and Time
6	_M8000D8000	_sM8000D8000	...	Non Retained	Equivalent variables of original M8000\/D8000 special elements
7	_CurErrInst	DINT[42]	...	Non Retained	Current Error instance address List
8	_LemStation	_sLEM_STATION	...	Non Retained	Local Module Extension Host Site
9	_FPGA	_sFPGA	...	Non Retained	The debug interface for the GA
10	_PanelTest	_sPANEL_TEST	...	Non Retained	Panel Test Interface
11	_CmpLst	_sCOMPONENT[64]	...	Non Retained	Component
12	_GL20_ExtSlt	_sGL20_EXT_S...	...	Non Retained	GL20 Local Extend Module Slot
13	_ExtCardInfo	_sEXT_CARD_INFO	...	Non Retained	Extension Cards Host Site
14	_ExtCard	_sEXT_CARD_E...	...	Non Retained	Extend Card Slot
15	_LemStationLFR	_sLEMSTATION...	...	Non Retained	Local Extend Module Loss Frame Rate
16	_RelayCntDisp	_sRelayCntDi...	...	Non Retained	Statistics of relay type PLC output actions
17	_OfflineTrace	_sOFFLINE_TRACE	...	Non Retained	Offline trace component statistic information
18	M8000	BOOL	OFF	Non Retained	Program run flag, run: ON, stop: OFF
19	M8001	BOOL	OFF	Non Retained	Program Stop Flag, Stop: ON, Run: OFF
20	M8002	BOOL	OFF	Non Retained	The first scan cycle flag of a program, the first scan cycle of a...
21	M8003	BOOL	OFF	Non Retained	The first scan cycle flag for non-program run, the first scan cyc...
22	M8011	BOOL	OFF	Non Retained	10ms cycle clock
23	M8012	BOOL	OFF	Non Retained	100ms Cycle Clock
24	M8013	BOOL	OFF	Non Retained	1s cycle clock
25	M8014	BOOL	OFF	Non Retained	1 minute cycle clock
26	M8020	BOOL	OFF	Non Retained	Calculate the zero bit flag
27	M8021	BOOL	OFF	Non Retained	Calculate Debit Mark
28	M8022	BOOL	OFF	Non Retained	Calculate carry mark
29	M8029	BOOL	OFF	Non Retained	Multi-cycle Instruction Execution Completion Flag
30	M8040	BOOL	OFF	Non Retained	SFC STL Status Forbidden Transfer
31	M8161	BOOL	OFF	Non Retained	Data mode, ON-8-bit mode, OFF-16-bit mode
32	M8163	BOOL	OFF	Non Retained	BINDA directive, flag with characters not kept at 0
33	M8165	BOOL	OFF	Non Retained	SORT sort, descending enable flag
34	M8168	BOOL	OFF	Non Retained	SMOV directives, ON-HEX format, OFF-BCD format
35	M8333	BOOL	OFF	Non Retained	BKCMP directive, the comparison results are all ONs
36	D8066	INT	0	Non Retained	Serious errors in user programs and instructions (triggered, not ...
37	D8067	INT	0	Non Retained	General errors in user programs and instructions (trigger, no reset)
38					

7 Fault Diagnosis

7.1 Overview of Fault Diagnosis

For more information, see section "Fault Diagnosis" in *H5U&Easy Series Programmable Logic Controller Programming Guide*.

Fault diagnosis serves to help users quickly locate the cause of operation deviation and find solutions based on the fault prompts. The PLC is integrated with the fault diagnosis function. When a fault occurs, you can see the detailed diagnosis information through hardware indicators and fault diagnosis window of the host controller programming software.

This chapter describes the fault diagnosis function in the following aspects: fault diagnosis methods, fault diagnosis cases, fault classification, and fault codes.

7.2 Fault Diagnosis Method

7.2.1 Introduction

The diagnostic information can be obtained through offline diagnosis with PLC signal indicators and online diagnosis with AutoShop software.

7.2.2 Offline Diagnosis with Signal Indicators

When the product is running in an operating environment and is not connected to AutoShop, you can determine the PLC status offline through the signal indicator on the product panel.

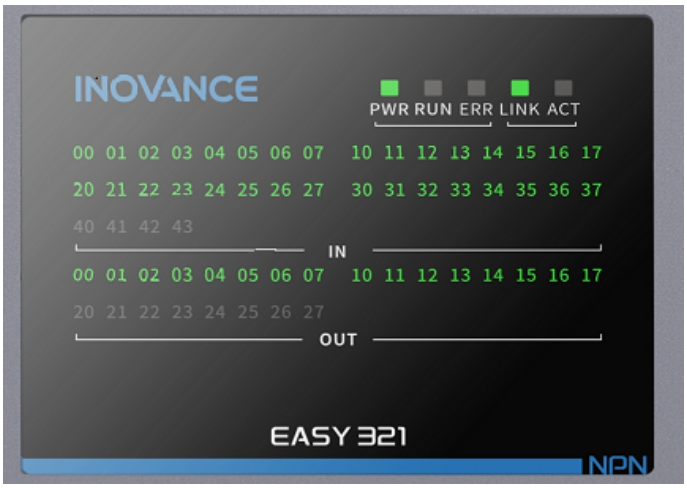

The following table describes the signal indicator definitions, status, and solutions.

Terminal type		Mark	Color	Description	Solution
Signal indicator	Power-on status indicator	PWR	Yellow-green	• Steady ON: Power supply OK • OFF: Power supply error	Used to check whether the power supply is normal.
	Operation status indicator	RUN	Yellow-green	• Steady ON: User program is running • OFF: User program stopped	Used to check whether the PLC operates properly.
	PLC system status indicators	ERR	Red	• OFF: No critical error • Flashing: The PLC is faulty and stops running.	If the ERR indicator flashes, use AutoShop online diagnosis to check the cause of the PLC error. For details, see *"7.2.3 Online Diagnosis with AutoShop" on page 83*.
	Network port status indicator	LINK	Yellow-green	• Steady ON: Network connected successfully • OFF: Network not connected	Used to check whether the network port is connected properly.
	Network port status indicator	ACT	Yellow-green	• Flashing: Data transmission in progress on the built-in network port • Steady ON: No data transmission on the built-in network port	Used to check whether data transmission of the network port is normal.
I/O indicator		IN	Yellow-green	• Steady ON: Signal input generated by the terminal • OFF: No signal input generated from the terminal	Used to check whether the input terminal is active. If not, check whether the input common terminal is wired properly.
		OUT	Yellow-green	• Steady ON: Signal output generated by the terminal • OFF: No signal output generate from the terminal	Used to check whether the output terminal is active. If not, check whether the common output terminal is wired properly. Transistor models with a large number of points are equipped with the output short circuit protection function. When the indicator turns on but no output is generated, check whether the output terminal is short-circuited. After the short circuit fault is rectified, the terminal function can be restored after the 24 V power supply of the output terminal is powered on again.

Note

To restart the product upon a fault, turn off the power supply and disconnect the USB power supply cable, and wait for at least 10s before power on again.

7.2.3 Online Diagnosis with AutoShop

The integrated fault diagnosis function allows you to view the fault source, fault details, and recommended solutions through AutoShop. This chapter describes how to use the diagnosis function of AutoShop.

Prerequisites

- The PLC has been connected to the PC that installed with AutoShop through a network cable or USB cable.
- The PLC has been powered on and started.

Operation procedure

1. Open the AutoShop fault diagnosis window. There are two ways to open the fault diagnosis window:
   - Method 1: Select "Debug > Fault Diagnosis" in the menu bar at the top of the AutoShop interface.
   - Method 2: Click the monitoring button in the AutoShop toolbar to enter the monitoring mode. The "Current status of PLC" and "Failure status" indicators locate at the bottom of the AutoShop interface.
     Double-click the fault indicator to open the fault diagnosis window. No fault occurs at this moment.

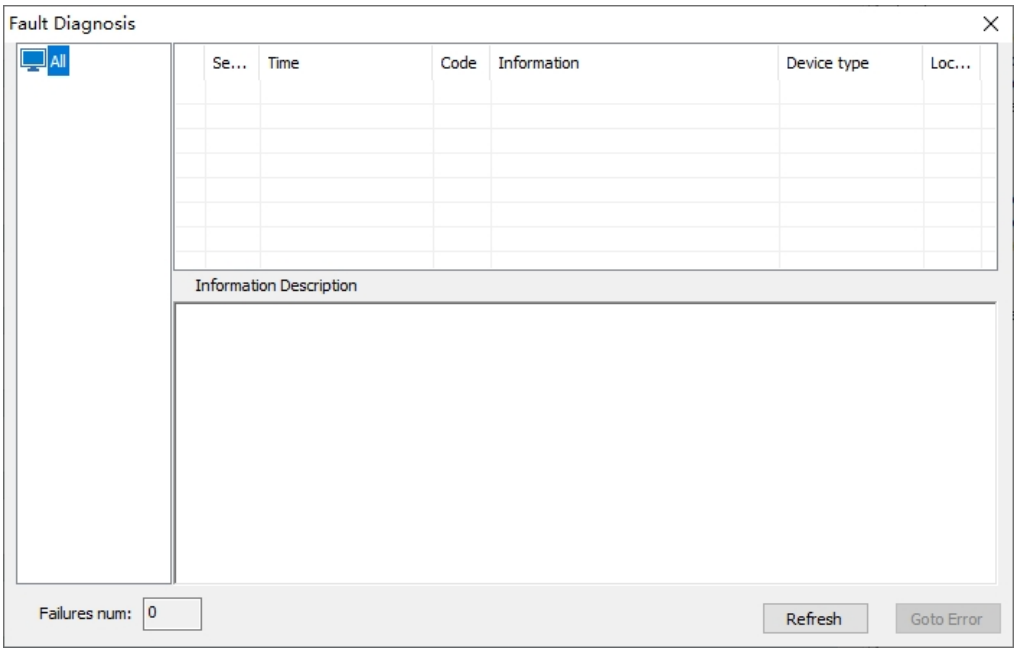

2. Perform fault diagnosis.

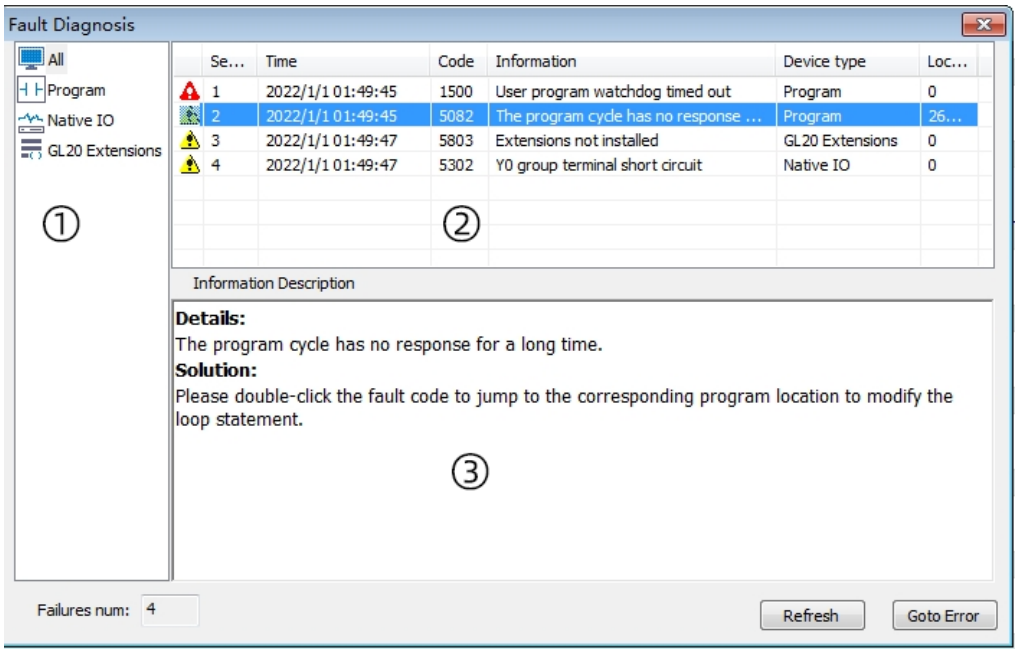

- You can filter the display of fault entries based on the device type through area ①.
- You can view the fault level, serial number, time, fault code, fault information, fault device type, and fault location through area ②.
  - There are two fault levels. One is critical fault that displayed in red triangle . Critical faults can cause the PLC to stop. The other is minor fault that displayed in yellow triangle . Minor faults do not cause the PLC to stop but need to be paid attention to.
  - Fault code is the unique number of a fault. For detailed fault codes, see section Fault codes in *H5U&Easy Series Programmable Logic Controller Programming Guide*.
  - The fault information indicates the fault cause.
  - The device type indicates the fault source.
  - You can locate the fault through "Goto Error" on the lower right corner of the fault diagnosis window.
- You can click on a specific fault entry to display the fault details and recommended solutions through area ③.

7.3 Fault Diagnosis Cases

The following takes the fault in *"7.2.3 Online Diagnosis with AutoShop" on page 83* as an example for fault diagnosis.

Prerequisites

- Watchdog time: 100 ms; fixed scanning cycle: 1 ms; 8-bit FOR loop written in the subprogram to make a watchdog timeout fault intentionally
- The module is configured with GL20-0808ETN, but the GL20-0808ETN module is not mounted actually.
- Make the Y0 terminal generate output through the program to short circuit the terminal intentionally.

Troubleshooting procedure

1. Perform offline diagnosis through the signal indicator. The RUN indicator on the PLC panel is off and the ERR indicator flashes in red, which indicates the PLC stops due to a fault.
2. Perform online diagnosis through AutoShop to determine the fault cause. Use AutoShop to monitor the PLC and open the fault diagnosis page.

- The entry 1 indicates that the error is caused by a watchdog timeout fault of the user program. Increase the watchdog time or check whether the program has sections with excessive execution time.

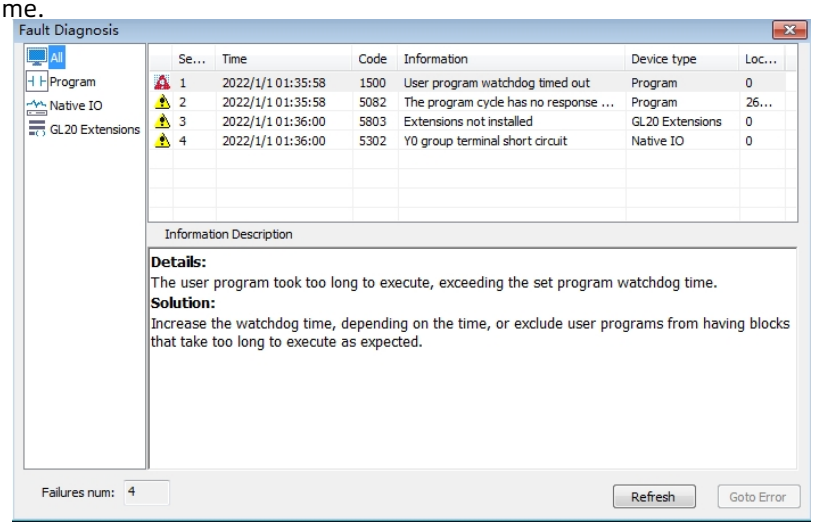

- The entry 2 indicates that the program loop is not responding in a long time. Click entry 2 to locate the 8-digit FOR loop that causes the watchdog timeout fault. In this case, you can optimize the program or increase the watchdog time as needed.

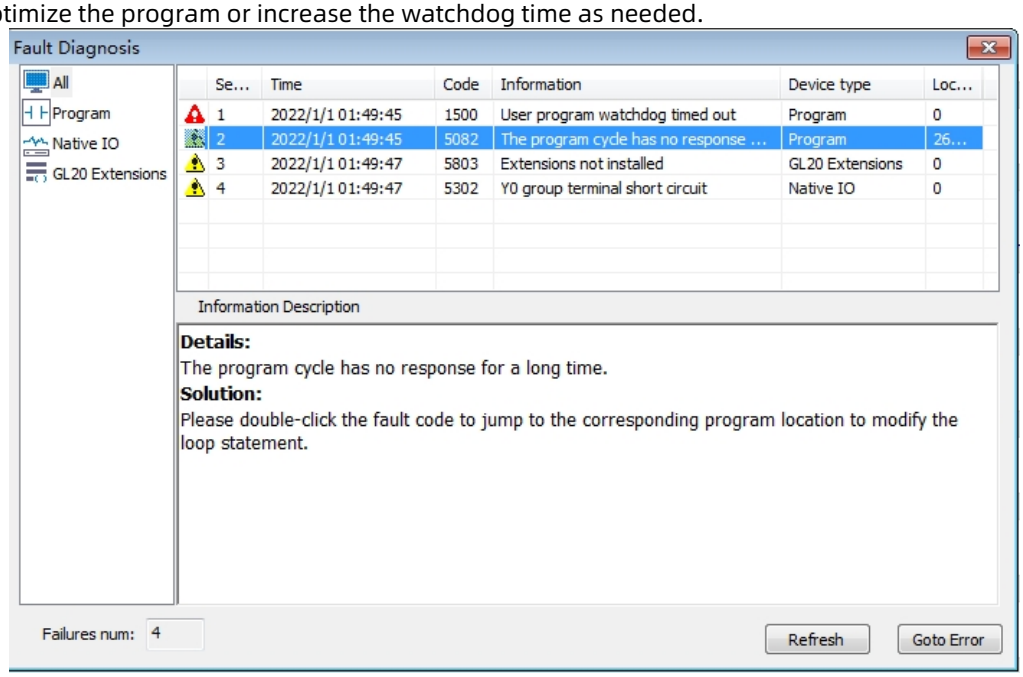

- The entry 3 indicates that short circuit exits in Y00 to Y07 terminals. Check the wiring to rectify the fault.

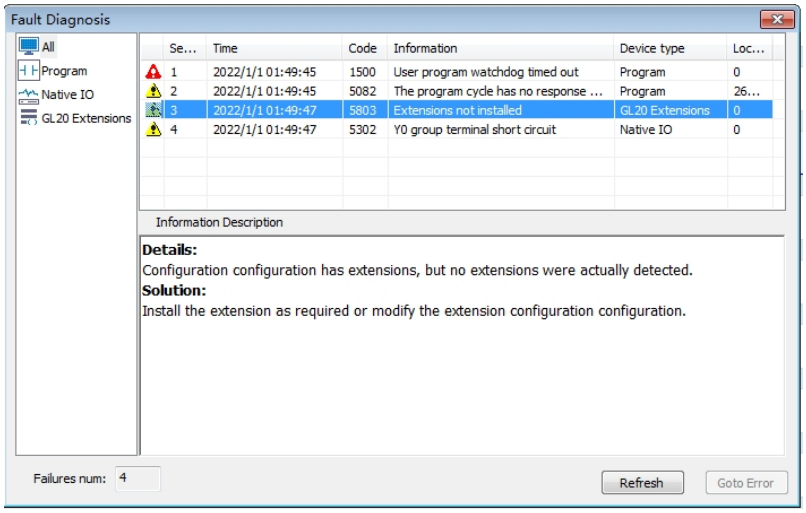

- The entry 4 indicates that the expansion module is not installed, but the user may have configured the expansion module.

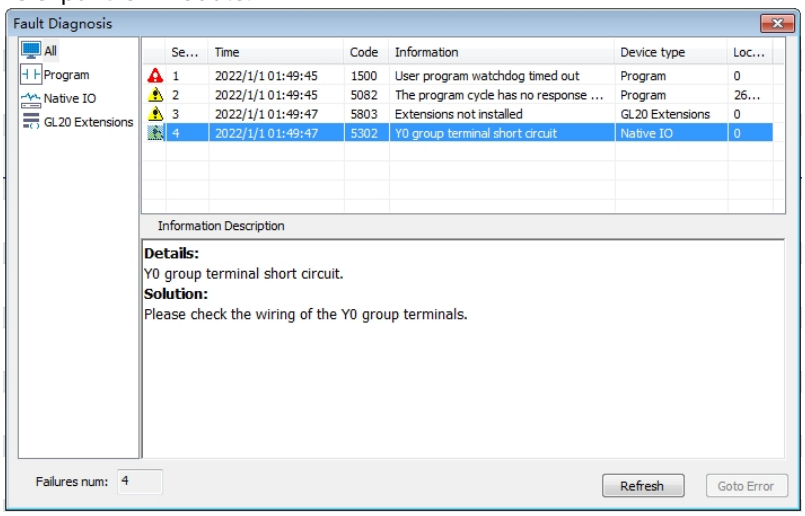

You can find and rectify this fault by viewing the "Project Management" window in the monitoring state.

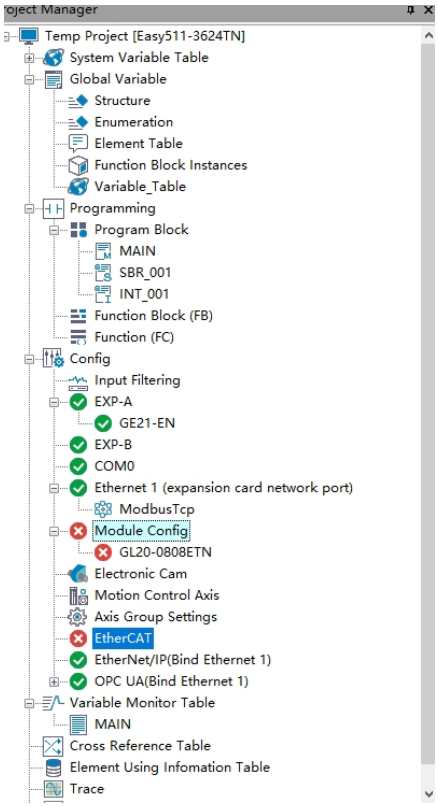

7.4 Fault Classification and Fault Codes

For a complete list of fault codes, see *H5U&Easy Series Programmable Logic Controller Programming Guide*.

The following table lists the newly added fault codes.

- **CPU fault codes**

Fault code	Fault message	Meaning	Solution
3010	After switching to ECT or ETH drive through the software, perform a restart to activate the switchover.	The ECT or ETH drive configured through the software does not match the drive actually operated by the board, resulting in PLC operation failure.	Power off and restart to activate the drive and run the PLC.
5902	Check whether network segment conflict exists between the network ports of the device. If a network segment conflict is detected, the local network port will be closed. Modify the network segment of the local network port.	The network segment is in conflict with others.	Modify the network segment of the local network port.

- **Local I/O fault codes**

Fault code	Fault message	Meaning	Solution
5302	The Yxx to Yzz terminals are short-circuited.	The Yxx to Yzz terminals are short-circuited.	Check the wiring of Yxx to Yzz terminals.

8 Maintenance

8.1 Cleaning and Routine Maintenance

8.1.1 Cleaning

Caution

Before cleaning, ensure that the power supply has been switched off. Do not use volatile solvents such as paint thinner, benzene, or chemical wipes for cleaning.

Clean the dirt with a piece of soft dry cloth during routine cleaning. For stubborn dirts that cannot be removed with the soft dry cloth, use a piece of cloth moistened with properly diluted cleaning agent (2% concentration), ensuring thorough wringing to achieve damp (not wet) condition prior to wiping.

8.1.2 Routine Maintenance

Tools needed

- Multimeter: Used to measure the voltage.
- Thermometer: Used to measure the temperature.
- Humidity meter: Used to measure the humidity.
- ESD cleaning cloth: Used to wipe dust or dirt.
- Phillips screwdriver: Used to tighten the screws and replace the battery.
- Slotted screwdriver: Used for wiring and terminal assembly/disassembly.

Routine maintenance items

Item	Description	Criteria	Solution
Power supply	Measure the voltage through the power terminal block to check whether the voltage variation is within the allowable range.	• Transistor type: 24 VDC input; voltage range: 21.6 VDC to 26.4 VDC • Relay type: 220 VAC input; voltage range: 85 VAC to 264 VAC • Analog type:• Voltage input range: ±10 V, 0 V to 10 V, ±5 V, 0 V to 5 V, and 1 V to 5 V• Current input range: ±20 mA, 0 mA to 20 mA, and 4 mA to 20 mA	Measure the voltage between terminals using a multimeter and keep the voltage variation within the allowable range.
	Check whether the power supply is also used by other devices.	The power of the power supply is higher than the power of all devices.	When multiple devices share the same power supply, oscillation may occur upon power-on due to insufficient power. It is recommended to use a separate power supply.
Environment inspection	Check for corrosive gas and flammable gas.	Not allowed	If corrosive gas or flammable gas exists, take counter measures.
	Check whether the ambient temperature is proper (When the PLC is installed in a cabinet, the temperature within the cabinet is the ambient temperature).	• Temperature: Single PLC: -20°C to +60°C Parallel PLCs: -20°C to +55°C • Humidity: < 95% RH (30°C), without condensation	If the specified temperature range and humidity are exceeded, take counter measures.
	Check for direct sunlight.	Not allowed	Take protective measure against the sunlight.
	Check for dust, dirt, salt, and iron filings.	Not allowed	Perform comprehensive cleaning and take protective measures.
	Check for droplets that stained with water, oil, or chemicals.	Not allowed	Perform comprehensive cleaning and take protective measures.
	Check for vibration or shock to the PLC.	The vibration or shock to the PLC must be within the specified range.	Use cushioning materials for vibration and shock resistance.
	Check for interference.	Not allowed	Keep the PLC away from interference sources or take shielding measures.
Check the installation and wiring.	Check whether cable connectors are fully inserted and locked.	Avoid loose connection.	Fully insert the connector and lock it with screws.
	Check whether crimping terminals used for external wiring locate closely to each other.	Keep a proper clearance between crimping terminals.	Check the clearance visually and rectify improper clearance.
	Check whether the external wiring screws are securely fastened.	Avoid loose connection.	Use a Phillips screwdriver to tighten the screws.
	Check whether external cables are broken.	The surface of external cables should be intact.	Check cables visually and replace broken cables (if any).
	Check whether the PLC rail lock is securely fastened to the DIN rail.	The PLC and guide rail are installed securely.	Connect the PLC to the DIN rail securely.

Item	Description	Criteria	Solution
Check the PE grounding and shield.	Check whether the PE is grounded securely.	Screws at the PE grounding point are connected securely.	Tighten the screws at the PE grounding points are connected securely.
	Check whether the conductor layer of the PE grounding cable is damaged.	Not allowed	Replace the PE grounding cable.
	Check whether the PE grounding point is rusted or oxidized.	The PE grounding point is free from rust or oxidation.	Remove rust and oxidation deposits from the PE grounding point.
	Check whether the shield of the shielded cable is damaged, corroded, or oxidized.	Not allowed	Replace the shielded cable.
	Check whether the shield of the shielded cable is bonded properly.	The shield of the shielded cable is bonded properly.	Bond the shield of the shielded cable properly.

8.2 Parts Replacement

8.2.1 Replacing the PLC

Prerequisites

- The PLC has been powered off.
- Prepare a slotted screwdriver or similar tool.

Operation procedure

1. Use a slotted screwdriver or similar tool to pry up the DIN rail mounting hook to remove the old module, as shown below.

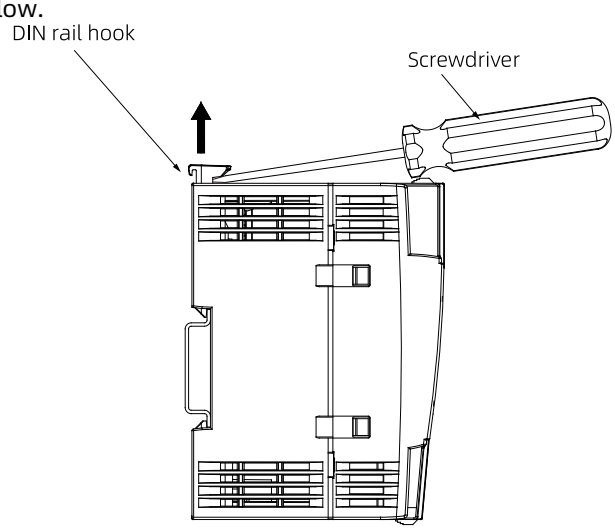

2. Pull the old module away from the rail, as shown below.

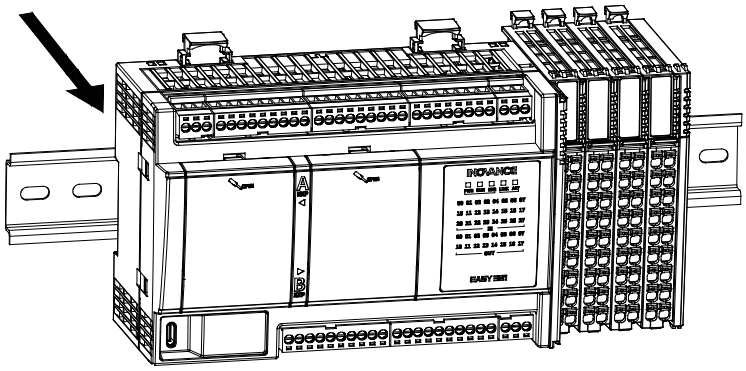

3. Install a new PLC, as shown in *"3.3.2 Installing the PLC" on page 36*.

8.2.2 Replacing the Expansion Card

For details on replacing the expansion card, see section 2.3 Installation Instructions in the following user guides.

- GE21-CAN-485 Communication Expansion Card User Guide/GE21-RTU Coupler Configuration Card User Guide
- GE21-TF-RTC Memory Expansion Card (Integrated with RTC) User Guide
- GE21-4AD1DA-I Analog Input and Output Current-Type Expansion Card User Guide
- GE21-8DI Digital Input Expansion Card User Guide
- GE21-8DO-TN Sink Transistor Output Expansion Card User Guide
- GE21-232 485-RTC Communication Expansion Card User Guide
- GE21-8DO-TP Source Transistor Output Expansion Card User Guide
- GE21-4AD1DA-V Analog Input and Output Voltage-Type Expansion Card User Guide

8.2.3 Replacing the Expansion Module

Prerequisites

- The module has been powered off.
- Prepare a slotted screwdriver or similar tool.

Operation procedure

1. Use a slotted screwdriver or similar tool to pry up the DIN rail mounting hook to remove the old module, as shown below.

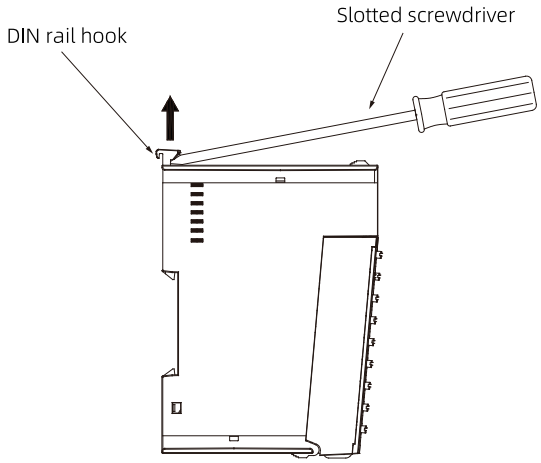

2. Pull the old module away from the rail, as shown below.

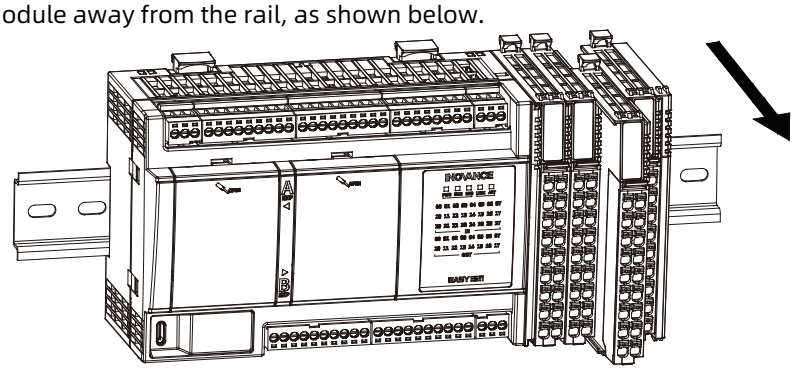

3. Install a new module, as shown in *"3.3.4 Installing the Expansion Module" on page 38*.

8.2.4 Replacing the Terminal

Prerequisites

- The PLC has been powered off.
- Prepare a slotted screwdriver or similar tool.

Operation procedure

1. Insert a slotted screwdriver down into the slot.

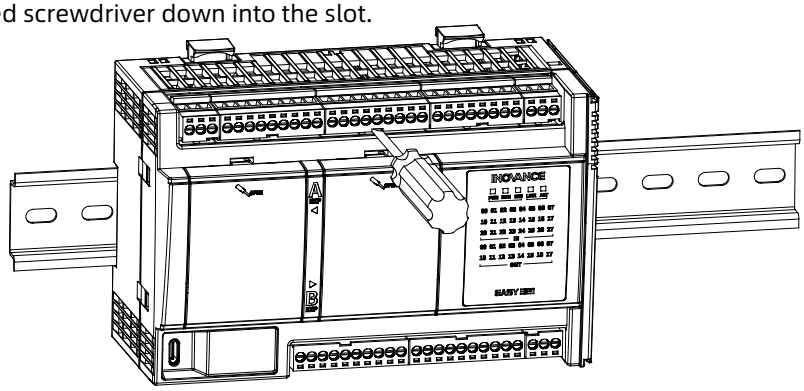

2. Gently pry up the old power supply terminal to separate it from the PLC, as shown below.

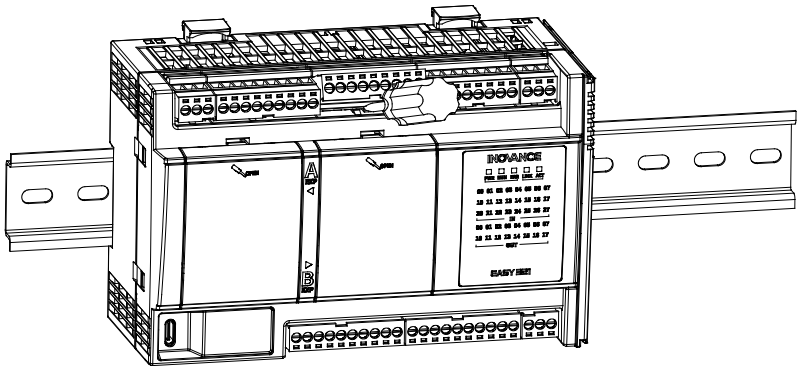

3. Insert the new power supply terminal properly.

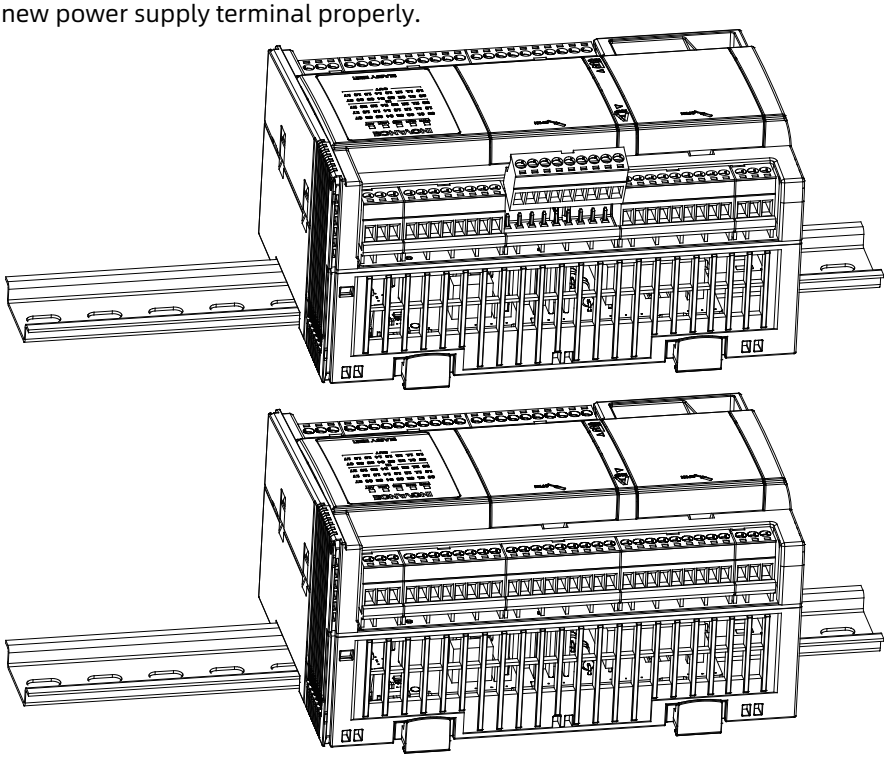

8.2.5 Replacing the Spare Battery

For details, see *"GE21-TF-RTC Memory Expansion Card (Integrated with RTC) User Guide"*.

8.3 Software Maintenance

8.3.1 Programming the Micro SD Card Firmware

Prerequisites

- Prepare a Micro SD card with file system FAT32 and capacity lower than or equal to 32 G.
- Power off the PLC.

Note

The original applications are deleted after the firmware is done programming.

Operation procedure

1. Load the Micro SD card to the GE21-TF-RTC expansion card and mount the GE21-TF-RTC expansion card to the PLC.
2. Power on the PLC again.
   a. The RUN indicator and ERR indicator on the PLC flash for three seconds, indicating that firmware programming starts.
   b. When the RUN and ERR indicators are steady ON, the firmware is being programmed.
   c. When the RUN and ERR indicators start flashing slowly, the firmware is done programming.
3. After firmware programming is done, power off the PLC and remove the GE21-TF-RTC expansion card.
4. Power on the PLC again.

8.3.2 Downloading User Program from Micro SD Card

Prerequisites

- Prepare a Micro SD card with file system FAT32 and capacity lower than or equal to 32 G.
- Power off the PLC.

Operation procedure

1. Generate a "Down/Updown" file using AutoShop. For details, see *H5U and Easy Series Programmable Logic Controllers Programming and Application Guide*.
2. Create a "PLCProgram" directory in the root directory of the Micro SD card and copy the "Down/Updown" file to the "PLCProgram" directory.
3. Load the Micro SD card to the GE21-TF-RTC expansion card and install the expansion card to the PLC.
4. Power on the PLC again and download the user program in the Micro SD card to the PLC. The RUN indicator flashes quickly at a frequency of 4 Hz during downloading.
5. After the user program is downloaded, the RUN indicator flashes slowly at a frequency of 1 Hz and the PLC enters the "STOP" state. You can remove the GE21-TF-RTC expansion card now.
   If the ERR indicator flashes slowly, the attempt to download the user program fails. Check whether the downloaded file is applicable to the PLC model and whether the login password of the downloaded file is the same as that of the PLC. If the model and password are both correct but the download still fails, contact Inovance for technical support.
6. Re-power on the PLC.

8.4 Maintenance

Unauthorized maintenance or disassembly of this product is inhibited. All liabilities arising from such unauthorized interventions shall be solely borne by the operator.

For maintenance upon fault, contact Inovance service personnel to deliver the faulty product to the designated address.

Requirements before product repair:

- The fault symptoms are described clearly.
- Make sure whether the accessories need to be replaced. If yes, contact Inovance service personnel.

9 Appendix

9.1 Appendix 1: Dimension Diagram

- Dimensions of DIN rail in mm

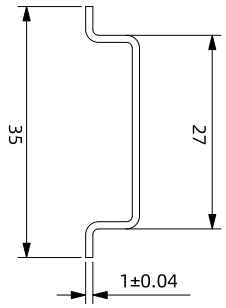

- Dimensions of PLC in mm

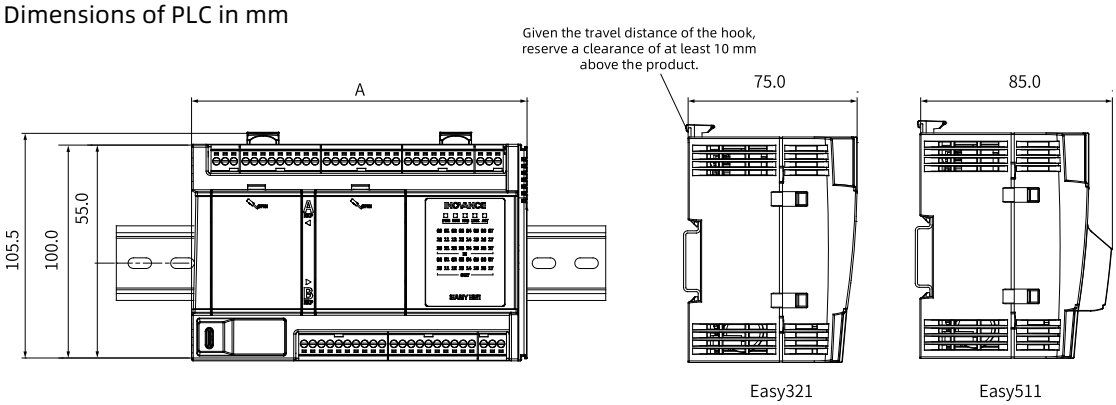

Model	Width A/mm
Easy321-3624ER	205
Easy321-3624TP	205
Easy321-3624TN	205
Easy511-3624TN	205
Easy321-2416ER	155
Easy321-2416TP	155
Easy321-2416TN	155
Easy511-2416TN	155

- Dimensions of the end cover in mm

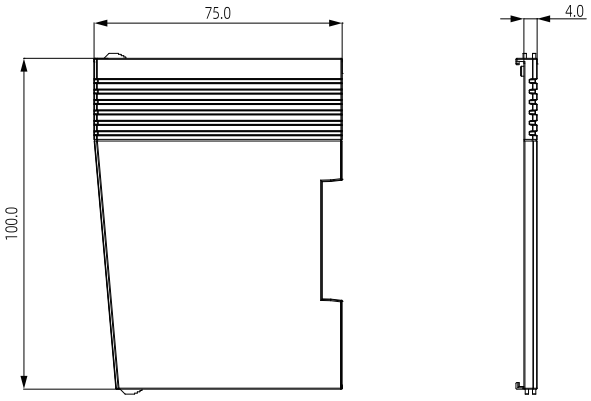

- Dimensions of cables in mm

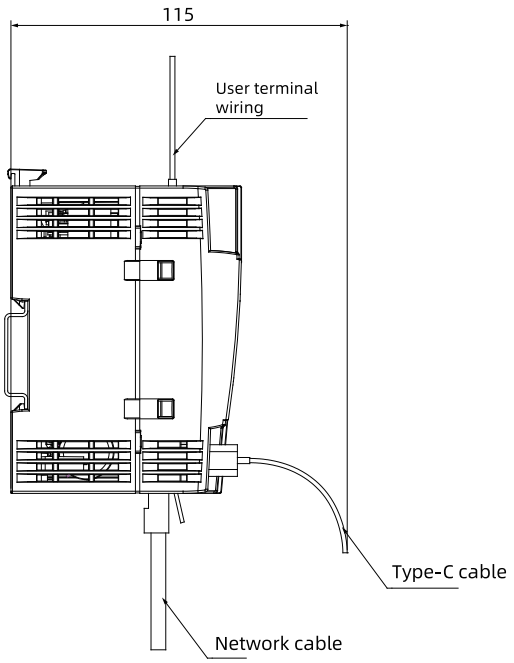

9.2 Appendix 2: Spare Parts

Name		Diagram	Material code
End cover		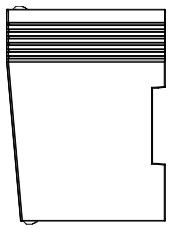	20215208
DIN rail mounting hook		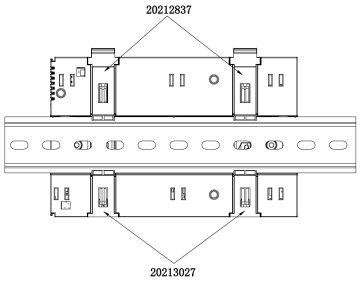	20213027 20212837
Input power supply terminal	PLC (relay model)	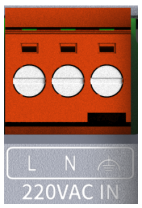	15212449
	PLC (transistor model)	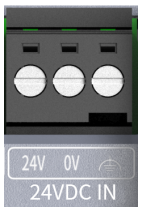	15212449

Name	Diagram	Material code
24 V power output terminal	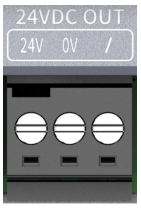	15212449
RS485 terminal		15212449

9.3 Appendix 3: Applicable Products

GE21 expansion card

Model	Description	Slot supported	Material code
GE21-CAN-485	PLC controller option - GE21-CAN-485-GE21 series CAN and RS485 communication card	A	01480073
GE21-TF-RTC	PLC controller option - GE21-TF-RTC-GE21 series TF card (integrated with RTC)	B	01480074
GE21-RTU	PLC controller option - GE21-RTU-GE21 series coupler configuration card	B	01480069
GE21-4AD1DA-I	GE21 series expansion card with four analog inputs and one analog output (current type)	A/B	01480070
GE21-8DI	GE20 series 8-channel digital input card	A/B	01480088
GE21-8DO-TN	GE21 series 8-channel digital sink transistor output card	A/B	01480090
GE21-232/485-RTC	GE21 series RS232 or RS485 communication card (integrated RTC)	B	01480072
GE21-8DO-TP	GE21 series 8-channel digital source transistor output card	A/B	01480089
GE21-4AD1DA-V	GE21 series expansion card with four analog inputs and one analog output (voltage type)	A/B	01480071

GL20 series expansion module

Module	Model	Description	Material code	Power consumption
Digital	GL20-0016ETP	16-channel digital transistor PNP output module	01440292	100 mA
	GL20-1600END	16-channel digital input module (NPN/PNP)	01440291	120 mA
	GL20-0016ETN	16-channel digital transistor NPN output module	01440293	145 mA
	GL20-0800END	8-channel digital input module	01440381	105 mA
	GL20-0008ETP	8-channel digital transistor PNP output module	01440380	80 mA
	GL20-0008ETN	8-channel digital transistor NPN output module	01440379	115 mA
	GL20-0808ETN	Digital hybrid module with 8 inputs and 8 outputs	01440339	130 mA
	GL20-0008ER	8-channel relay output module	01440334	110 mA
	GL20-3200END	32-channel digital transistor input module	01440466	85 mA
	GL20-0032ETN	32-channel digital transistor NPN output module	01440467	80 mA
	GL20-0404ETP-5V	4-channel digital transistor PNP output module	01440506	90 mA
	GL20-3232ETN-M	32-point digital input and 32-point transistor NPN output module (cables XA3210A-40-L0.5M-01 and T024-K required)	01440290	250 mA
Analog	GL20-4AD	4-channel analog input module (sampling cycle 1 ms/channel)	01440288	95 mA
	GL20-4DA	4-channel analog output module	01440287	70 mA
	GL20-8ADV	8-channel analog input module - voltage type	01440482	65 mA
	GL20-8ADI	8-channel analog input module - current type	01440489	65 mA
Temperature measurement	GL20-4PT	4-channel thermal resistor temperature detection module	01440337	95 mA
	GL20-4TC	4-channel thermocouple module	01440338	95 mA
Process module	GL20-2SSI	2-channel encoder input module (SSI protocol)	01440445	115 mA
Power supply module	GL20-PS2	Relay power supply module	01440351	55 mA
Communication module	GL20-2S485	2-channel RS485 expansion module (Inovance PLC supported only)	01440456	155 mA
	GL20-2SCOM	2-channel RS232/RS485/RS422 communication module (Inovance PLC supported only)	01440463	170 mA

9.4 Appendix 4: Recycle and Disposal

Recycle and dispose of the PLC according to environmental protection requirements. Contact a qualified company for electronic waste disposal and dispose of the product according to the applicable regulations in the country/region.

Term

DC

DC (Distributed Clock) is a clock synchronization mode of the EtherCAT bus that is used to ensure clock synchronization of all devices in the network. Each slave device has a local clock, which is calibrated through the synchronization signal sent by the master to ensure that all EtherCAT devices in the entire system are running under a common clock, thus controlling the synchronization execution of each device task.

SM

SM (SyncManager) is a clock synchronization mode on the EtherCAT bus that ensures clock synchronization of all devices in the network. The synchronization mode is triggered by SYNC events to ensure that all devices perform data processing and update at the same time, thus controlling the synchronization execution of tasks of each device.

Service and Support

Should you encounter a safety accident during the use or operation of the product, or face challenges in operating and maintaining the equipment, which remain unresolved after the relevant documentation is consulted, we provide multiple channels to ensure prompt resolution:

- Channel 1: Pay attention to Inovance Technology Services WeChat public number. Click Smart Customer Service to enjoy 7 x 24-hour product support services, including function application consulting. Troubleshooting instructions, obtaining manual materials, etc.
- Channel 2: Call the national unified service hotline: 4000-300124. Service hours: Monday to Saturday, 8:30 to 12:00 and 13:30 to 17:30.
- Channel 3: Visit Inovance website (www.inovance.com) to enjoy downloading materials, pre-sales consulting, and after-sales support. Service such as return repair application and authentication.
- Channel 4: For equipment installation and commissioning, warranty fault handling, factory-based co-production, and spare parts purchase, For maintenance and other services, you can visit the Inovance app-service store on Palm Beach to place orders (download link:*https://zshc.inovance.com/download*or download the experience to the mobile app market/app store).

We are committed to providing you with quick and professional technical support, and we look forward to your satisfaction and trust.

Copyright © Shenzhen Inovance Technology Co., Ltd.

PS00017976A03

Shenzhen Inovance Technology Co., Ltd.

www.inovance.com

Add.: Inovance Headquarters Tower, High-tech Industrial Park,
Guanlan Street, Longhua New District,
Shenzhen 518000, P.R. China

Tel: (0755) 2979 9595 Fax: (0755) 2961 9897

Suzhou Inovance Technology Co., Ltd.

www.inovance.com

Add.: No. 52, Tian E Dang Road, Wuzhong District, 215104,
Suzhou City, Jiangsu Province, P.R. China

Tel: (0512) 6637 6666 Fax: (0512) 6285 6720